We Can Fly, You and I

MAKING TIME FLY

Objectives

The students will:
Identify and research aviation events.
Create a time line of aviation events.
Analyze the information to interpret changes in aviation.
Develop a presentation based on historical events in aviation.

Standards and Skills

Science
Science in Personal and Social Perspectives
History and Nature of Science

Science Process Skills
Communicating
Investigating
Collecting Data

Mathematics
Problem Solving
Communication

Background

Each event in a time line can be thought of as a link to the past or future of something. Building an aviation time line based on drawings or models helps students visualize the numerous changes that have occurred in the history of aviation.

The changes in aviation offer important clues to help students not only understand the concept of advancement and improvement, but also the reasons behind the changes.

In 1783 the balloon became the first human-made device capable of lifting humans into the air. It allowed humans to fly, but balloons drift with the wind, and the speed and destination of each flight depended largely upon the weather. The limitations of ballooning inspired people to develop new technologies to expand the realm of flight. Change was inevitable. Propulsion was added

to the balloon to help control its flight path, increase its speed, and make it move against the wind.

When powered, controlled flight became possible with the Wright Flyer airplane in 1903, changes in aviation happened at a quick rate. Many of the changes were driven by aviators' desire to fly higher, faster, and farther. Some changes occurred to satisfy specific, practical requirements: the flying boat permitted flight operations from bodies of water, and the helicopter could takeoff and land practically anywhere. Navigation instrumentation allowed for flights in adverse weather and darkness.

Other changes occurred to satisfy the human spirit. Advanced gliders allowed people to soar with the birds, and acrobatic airplanes allowed pilots to dance in the sky.

Creating a time line requires students to find out all they can about an event. Research information for a time line can be obtained from many sources. Books, magazines, newspapers, and people are a few examples. A vast amount of information is also available on the Internet.

More information about some of the events listed in this activity are contained in the "Aeronautics Background for Educators" section of this guide (pp. 10-12).

Management

The amount of time required for this lesson will be primarily determined by how much time the students are assigned for research. Students may work individually, in pairs, or small groups.

Activity

1. Show students a picture of a modern airliner that can be found in a magazine or book. Ask them if this is the type of plane in which people have always flown.

2. Review what a time line is and why it is an important way of displaying information.

3. Hand out the Student Pages (Time Line Events, and illustrated Time Line). Briefly discuss events on the sheet and how they depict a time line.

4. Explain to the students that they are going to research aviation events and create a time line that shows important people and changes in aviation. Each student or pair of students should find out all they can about an event and be able to draw a picture of it.

5. Once students have completed their research, they can decide how the event will be displayed in the time line. Students can design cards for the time line or build a paper model. Other ways to display the event include magazine cutouts, pictures, and models made from recycled or "throw away" items found around their home.

6. Bring all items together to form a class time line. The time line can be hung from the ceiling, attached to a wall or put on a shelf or table. Ask each student to present and position his or her event on the time line.

Discussion

1. How important was the event you researched to changes in aviation?

2. If a particular time line event had never occurred, how do you think this might have changed aviation history?

3. How did the time line that the class created help you to learn about aviation history?

Assessment

Students will successfully meet the objectives of this lesson by researching an aviation event and creating their part of the time line.

Extensions

1. Have students predict what future events and designs in aviation might look like. Draw pictures and write about it.

2. Using the information gathered in the students' research, have them write a report or story about their event.

3. Have students pretend they are one of the aviation characters that they researched. Groups of students can role-play the characters in skits or plays.

Time Line Events

Use these events to begin your time line

Key words are in the events below.

400 B.C.	The first *kites* were invented by the Chinese.
1485	*Leonardo da Vinci* designed the *ornithopter* (a wing flapping aircraft).
1783	*Joseph and Etienne Montgolfier* launched the first passengers—a duck, a sheep, and a rooster—in a *hot air balloon.*
1849	*Sir George Cayley,* "The Father of Aerial Navigation," designed the first three-wing *glider* that lifted a person off the ground.
1891	*Otto Lilienthal* built the first practical *glider* for long flights.
1903	The *Wright Brothers* developed the first motor-powered *airplane* that a pilot could control.
1907	*Paul Cornu* built the first free flying *helicopter.*
1919	*Lieutenant-Commander A.C. Reed* and his crew were the first to fly across the Atlantic Ocean, making several stops, in the *Curtiss Flying Boat.*
1927	*Charles Lindbergh* was the first person to fly across the Atlantic Ocean nonstop.
1935	*Amelia Earhart* was the first person to fly solo across the Pacific Ocean from Hawaii to California.
1947	*Chuck Yeager* became the first pilot to break the sound barrier.
1979	The *Gossamer Albatross* was the first craft powered by a human (Bryan Allen) to fly across the English Channel.
1986	Dick Rutan and Jeana Yeager flew Voyager around the world nonstop without refueling.
1997	The NASA/AeroVironment *Pathfinder* became the first *solar-powered aircraft* to fly above the troposphere.

Time Line

400-350 BC

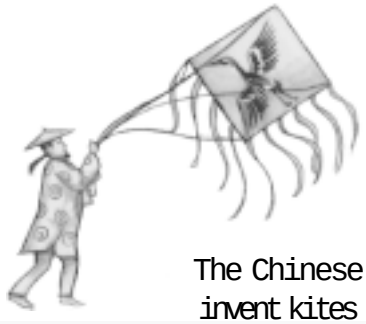

The Chinese
invent kites
400 BC

1450-1499

da Vinci ornithopter
1485

1750-1799

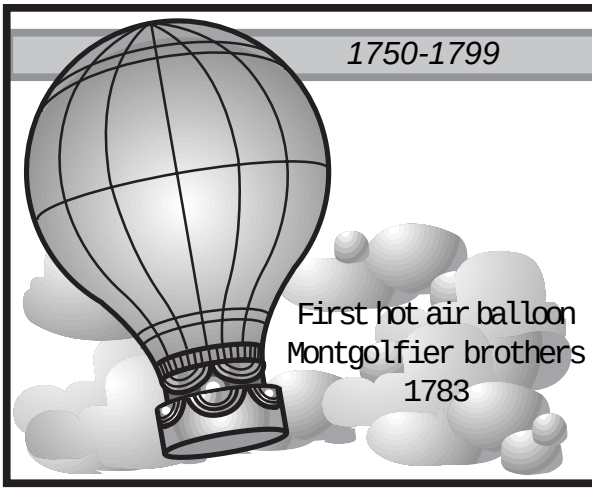

First hot air balloon
Montgolfier brothers
1783

1800-1850

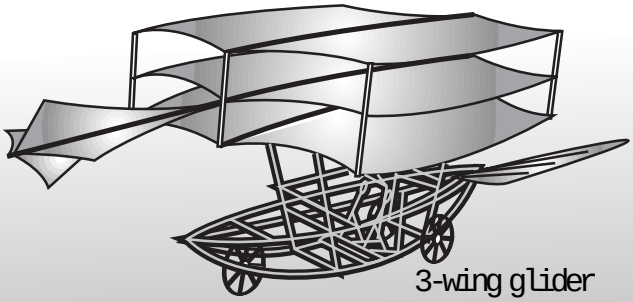

3-wing glider
Sir George Cayley
1849

1850-1899

Lilienthal glider
1891

1900-1949

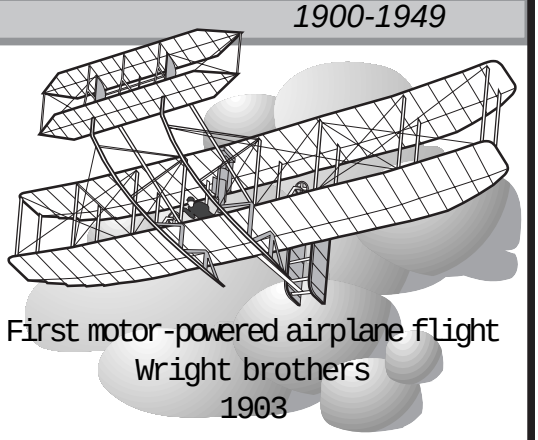

First motor-powered airplane flight
Wright brothers
1903

Time Line

1900-1949

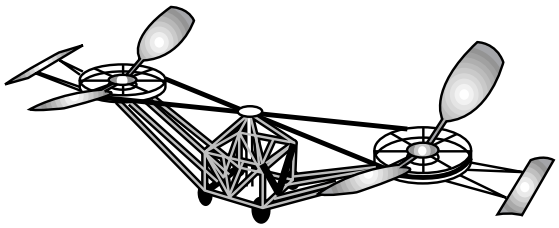

First helicopter
Paul Cornu
1907

1900-1949

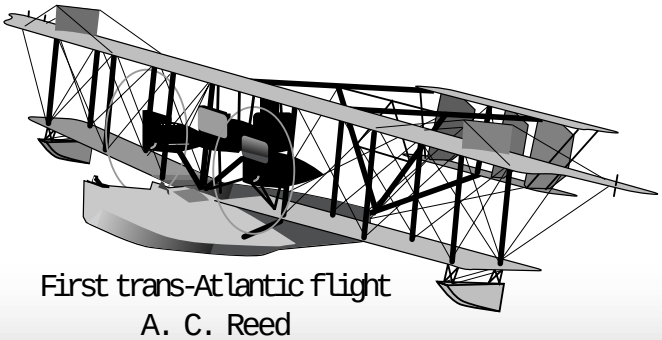

First trans-Atlantic flight
A. C. Reed
1919

1900-1949

First non-stop
flight across Atlantic
Charles Lindbergh
1927

1900-1949

First solo flight Hawaii-California
Amelia Earhart
1935

1900-1949

First human flight faster than sound
Chuck Yeager
1947

1950-2000

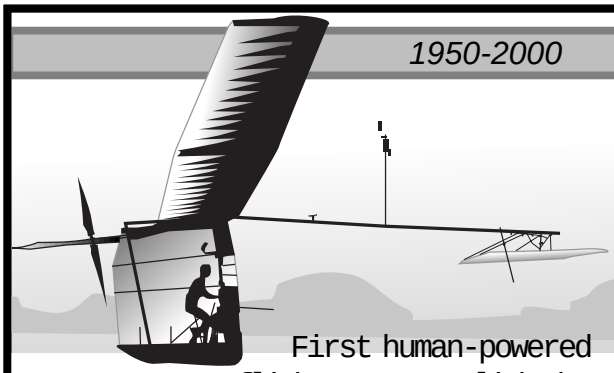

First human-powered
flight across English Channel
Bryan Allen
1979

Time Line

1950-2000

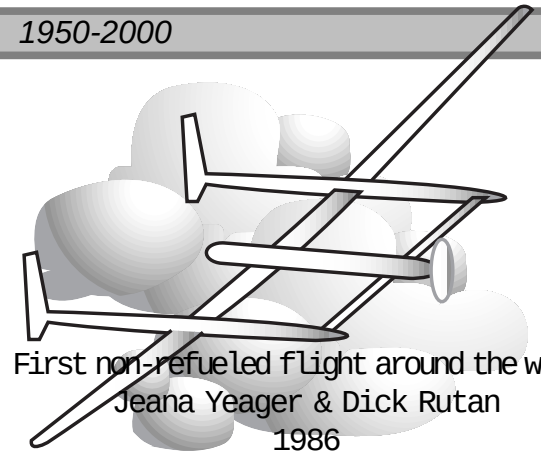

First non-refueled flight around the world
Jeana Yeager & Dick Rutan
1986

Add to the time line by researching other aeronautical events, or design events of the future.

1950-2000

First solar-powered aircraft to fly above the troposphere
NASA/AeroVironment
1997

2000-2050

1900-1949

1950-2000