NASA Contractor Report 186011

Automated Flight Test Management System

M.D. Hewett, D.M. Tartt, and A. Agarwal

Contract NAS2-12670
May 1991

National Aeronautics and
Space Administration

NASA Contractor Report 186011

Automated Flight Test Management System

M.D. Hewett
D.M. Tartt
SPARTA, Inc.
23041 Ave. de la Carlota, Suite 400
Laguna Hills, CA 92653

A. Agarwal
Integrated Systems, Inc.
2500 Mission College Blvd.
Santa Clara, CA 95054

Prepared for
NASA Dryden Flight Research Facility
Edwards, California
Under Contract NAS2-12670

1991

National Aeronautics and
Space Administration

Dryden Flight Research Facility
Edwards, California 93523-0273

TABLE OF CONTENTS

SECTION			PAGE
GLOSSARY			iii
1.0	Summary		1
2.0	Introduction		2
3.0	Background		3
	3.1	Need for a Rapid-Prototyping Flight Research Facility	4
	3.2	Validation of Embedded Expert Systems	4
4.0	Components of Automated Flight Test Management System (ATMS)		5
	4.1	ATMS Hardware	5
	4.2	ATMS Software	6
	4.3	Flight Test Trajectory Generator (FTTG)	7
	4.4	Flight Test Planning Expert System	10
	4.5	Man/Machine Interface (MMI)	13
	4.5.1	ATMS MMI	13
	4.5.2	ATMS Operations	15
	4.5.3	ATMS Phase I Flight Test Maneuvers and Maneuver Segments	19
	4.5.4	ART (Rule Based) Implementation of the MMI	21
	4.6	Flight Test Monitor Expert System	23
	4.7	F-15 Simulations	23
	4.7.1	6 DOF Simulation	23
	4.7.2	3 DOF Simulation - Digital Performance Simulation (DPS)	24
5.0	Automated Flight Test Management System Configurations		24
	5.1	Flight Test Engineer's Workstation	24
	5.2	Simulation Validation System	25
	5.3	Flight System	26
	5.4	System Network Communications	27
	5.4.1	ETHERNET Communication	29
	5.4.2	Shared Memory Communication	29
6.0	Use of the ATMS in the Development of the Rapid-Prototyping Facility		30
7.0	Capabilities and Limitations of the ATMS Prototype System Developed in Phase I		30
	7.1	System Capabilities	30
	7.2	System Limitations	31

TABLE OF CONTENTS

SECTION		***PAGE***
8.0	Results and Conclusions concerning the Phase I Effort	32
9.0	Recommendations for Further Research and Development	32
	9.1 Recommendations for Further Research	32
	9.2 Recommendations for Further Development	33
10.0	References	33

GLOSSARY

AFB	Air Force Base
AI	Artificial Intelligence
Ames-Dryden	Dryden Flight Research Facility of the NASA Ames Research Center
ART	Automated Reasoning Tool
ATMS	Automated Flight Test Management System
a_n	Normal Acceleration, g
DFBW	Digital Fly-by-Wire
FTE	Flight Test Engineer
FTMAP	Flight Test Maneuver Autopilot
FTTC	Flight Test Trajectory Control
FTTG	Flight Test Trajectory Guidance
HIDEC	Highly Integrated Digital Electronic Control
HiMAT	Highly Maneuverable Aircraft Technology
NAS	National Airspace System
NRCFRF	National Remote Computational Flight Research Facility
NOE	Nap-of-the-Earth
p	Roll Rate, deg/sec
PLA	Power Lever Angle (throttle), deg
RAV	Remotely Augmented Vehicle
RPRV	Remotely Piloted Research Vehicle
TACT	Transonic Aircraft Technology
TCP/IP	Transmission Control Protocol/Interest Protocol
δa	Aileron Command, deg
δe	Elevator command, deg
δr	Rudder Command, deg

1.0 Summary

This report describes the Phase I development of an automated flight test management system (ATMS) as a component of a rapid-prototyping flight research facility for AI-based flight systems concepts. The ATMS provides a flight test engineer (FTE) with a set of tools that assist in flight test planning, monitoring and simulation. This system is also capable of controlling an aircraft during flight test by performing closed-loop guidance functions, range management and maneuver-quality monitoring. The ATMS is being used as the prototypical system to develop a flight research facility for AI-based flight systems concepts at NASA Ames Dryden.

The system developed in Phase I is a pilot system which provides limited flight test planning, replanning and monitoring at the individual flight test level. The system was developed on a TI Explorer LX computer and a MASSCOMP 5400 computer. The system software was developed in ART, LISP, C and FORTRAN and consists of an integrated set of programs which include expert systems, flight test trajectory control algorithms, 3DOF and 6 DOF F-15 simulations, a man-machine interface, communications and interface software. The system interfaces with the NASA Simulation Facility (NASA SIM) via ETHERNET (TCP/IP). The system has been delivered to NASA Ames Dryden and has been successfully demonstrated in an integrated simulation with the NASA SIM of an F-15 limited flight test.

The primary goals of the Phase I ATMS development were 1) to develop a real-time local area network (LAN) which integrated a new AI laboratory with the NASA Simulation Facility and 2) to develop a distributed processing capability combining numeric and symbolic processors. A secondary goal was to develop a prototypical flight test engineer's assistant workstation to demonstrate the primary goals.

With respect to these goals, the following achievements were recorded in Phase I:

1) A prototype of a flight test engineer's assistant workstation was developed and demonstrated,

2) The coupling of a knowledge-based system with numeric processing for flight planning was demonstrated,

3) Real-time communication was demonstrated between ATMS components,

4) A structure was developed for the enhancement of ATMS performance in future phases,

5) Knowledge-based scheduling of flight test maneuvers was demonstrated.

All goals were achieved but with marginal real-time system performance. The following shortcomings were observed during the research effort:

1) The Gould/SEL ETHERNET interface currently implemented in the NASA Simulation Facility cannot support the real time communication requirements imposed by ATMS.

2) ETHERNET TCP/IP protocol is probably too high level for real time communication.

3) The TI Explorer/LX cannot support real time operations dues to its architecture and system software configuration.

4) Automated Reasoning Tool (ART) is not an appropriate run-time environment for executing rule-based code in real time.

Most importantly, the Phase I effort demonstrated that a system composed of multiple symbolic and general purpose computers, and highly integrated rule-based and conventional coded algorithms is feasible and highly desirable for automating flight test tasks performed by flight test engineers, test monitors, test conductors, test pilots and analysts. The traditional rule-based expert system approaches to planning, scheduling, monitoring, data interpretation, and control are applicable to the flight test environment.

Follow-on research is highly recommended in several areas as follows:

1) investigate means of increasing the speed of communications between the ATMS host processor and the NASA simulation facility by a factor of 1000,

2) investigate means to increase the speed of rule firings in the ATMS monitor and replanner by a factor of 100,

3) investigate the use of alternate computer hardware and software both as a development environment for ATMS and as a run-time environment,

4) improve the performance of the ATMS user interface by employing a conventionally coded interface as opposed to a rule-based interface,

5) investigate the applications of ATMS to the flight testing of hypersonic vehicles including the National Aerospace Plane (NASP).

Follow-on development is highly recommended to:

1) complete the development of and deploy a prototype flight test engineer's workstation as an assistant in flight planning for all flight test programs conducted at NASA Dryden.

2) demonstrate ATMS technology in a limited flight test to be conducted within fiscal 1989 using a NASA F-18 flight test airplane.

Finally, the integrated contractor/NASA research team approach to this work resulted in a highly effective coordinated effort in which maximum technology transfer was achieved both ways between the contractor and NASA. The technical contribution of the NASA engineers working on the project was significant and essential to the success of the effort.

2.0 Introduction

The Automated Flight Test Management System (ATMS) is being developed at the Dryden Flight Research Facility of the NASA Ames Research Center (Ames-Dryden) as a part of the NASA Aircraft Automation Program. This program is focused on applying interdisciplinary state-

of-the-art technology in AI, control theory, and systems methodology to problems of operating and flight testing high-performance aircraft.

While this program has flight research as a major emphasis, it is not based on a dedicated research aircraft nor does the program concentrate on one aircraft exclusively. The Aircraft Automation Program is designed to be a broad-based applied research program in intelligent systems that capitalizes on opportunities within other flight research programs at Ames-Dryden.

The ATMS was selected as the first major project with the Ames-Dryden Aircraft Automation Program to provide an early demonstration of an application of real-time control using an expert system. The ATMS approach was particularly attractive because it included a fairly straightforward integration of symbolic and numeric processing and would serve to develop the rapid-prototyping facility.

The ATMS provides a flight test engineer (FTE) with a set of tools that assist in flight planning and simulation. This system is also capable of controlling an aircraft during flight test by performing closed-loop guidance functions, range management, and maneuver-quality monitoring. The ATMS is being used as the prototypical system to develop a flight research facility for AI-based flight systems concepts.

The rapid-prototyping facility includes real-time, high-fidelity simulators, numeric and symbolic processors, and high-performance research aircraft specially modified to accept commands from a ground-based remotely augmented vehicle (RAV) facility. The RAV technique is the key idea of the rapid-prototyping facility; it is the RAV technique which provides the unique capability of easy, direct transition from simulation to flight. This technique has been used on numerous programs in the past for the rapid-prototyping of flight controls concepts. The capability of conducting flight research in AI is based on an enhancement to the RAV facility which incorporates symbolic and conventional processors in a distributed computing system.

This report details the development of ATMS through Phase I.

3.0 Background

The ATMS is an outgrowth of the flight test trajectory guidance (FTTG) work performed over the past decade on such programs as the F-111 Tactical Aircraft Technology (TACT) Program, the F-15 Propulsion/Airframe Integration Program, and the F-15 10° Cone Program [Reference 1]. The FTTG provided display information to the pilot to allow complex, demanding flight research maneuvers to be flown more accurately. The FTTG was extended to a closed-loop system for the Highly Maneuverable Aircraft Technology (HiMAT) Program flight test maneuver autopilot (FTMAP) [Reference 2]. In conjunction with this flight research at Ames-Dryden, Integrated Systems, Inc., under contract to NASA has developed a design methodology for these types of controllers [References 17, 8 and 9] which have resulted in the basis of a flight test trajectory controller (FTTC) which is scheduled to be flight tested in early 1988 on the F-15 Highly Integrated Digital Electronic Control (HIDEC) aircraft. This FTTC is a major component of the ATMS.

The ATMS project is structured around a flight test scenario and is an extension of work performed by SPARTA, Inc., under contract to NASA defining the need for a National Remote Computational Flight Research Facility (NRCFRF) [Reference 14]. The work on the NRCFRF contract defined the need for an expanded RAV capability and a flight program to demonstrate that

capability. In the ATMS, a range, energy, and failure management expert system is used in conjunction with the FTTC to order maneuvers by priorities and energy management considerations while restricting the vehicle to the confines of a specified Edwards AFB test range. This expert system can be used on-line to control the research aircraft in flight and monitor the progress of a flight test; or off-line as a planning tool for ordering the test maneuvers for a flight. The expert system will use predictions of maneuvers based on simulation models for planning and will use actual flight test data measurements for real-time vehicle control, data monitoring and flight test management.

3.1 Need for a Rapid-Prototyping Flight Research Facility

The need for a rapid-prototyping flight research facility has long been recognized by NASA. At Ames-Dryden this concept evolved from experience with remotely-piloted research vehicles (RPRVs) [References 13 and 5] and from experience with digital flight control systems on vehicles such as the 3/8-th scale F-15 and HiMAT vehicle [Reference 12] and providing a remote computation facility for cockpit displays [Reference 1]. The RAV concept was developed to aid in testing advanced or multiple control law concepts without the expensive and time-consuming process of repeated aircraft system modifications.

The rapid-prototyping flight research facility for AI-based flight systems concepts is being developed as an extension of the RAV facility to serve as an adjunct to the usual avionics development process which proceeds from research and development laboratories to simulators of increasing complexity and, occasionally, to an expensive and often one-of-a-kind, single-purpose flight demonstrator vehicle. The rapid-prototyping facility described in this report is, in a sense, simply an extension of the more elaborate high-fidelity simulators. However, this facility is more realistically viewed as a bridge between simulation and demonstrator development.

The value of implementing a prototype system is that many problems can be discovered and solved before large commitments of resources have been expended. By addressing these problems (or potential problems) early in the development cycle, one can often avoid many of the more costly and time-consuming exercises associated with late introduction of changes and modifications. Prototyping is recognized as an important part of the development process for both AI systems and aircraft. The rapid-prototyping facility described in this report adds to the developer's ability to continue this process before undertaking the task of implementation on a demonstration aircraft. This is especially important in the transition from simulation to flight.

The rapid-prototyping flight research facility will provide a flexible, general-purpose capability for the early solution of problems certain to be discovered in future development programs. The use of this facility will allow the system developer to benefit from flight testing without incurring the cost and schedule burdens normally associated with flight.

3.2 Validation of Embedded Expert Systems

The validation of embedded expert systems is the primary focus of the Aircraft Automation Program at Ames-Dryden. The ATMS will be used as the premiere system for development and demonstration of a validation methodology for embedded expert systems. The ATMS is an ideal application with which to develop this methodology because:

1. the ATMS is mission rather than flight critical;

2. the methodology used for the verification and validation (V&V) of flight control systems can be applied to the system; and,
3. V&V methodologies can be developed in parallel with ATMS development which allows for the development and incorporation of attributes into the ATMS design which enhance V&V.

4.0 Components of Automated Flight Test Management System (ATMS)

4.1 ATMS Hardware

The main hardware components of the Phase I ATMS are a Texas Instruments Explorer LX symbolic computing system (TI EXP-LX), a MASSCOMP 5400 general purpose conventional computer workstation, the NASA Simulation Facility (NASA SIM) and ETHERNET communication hardware.

The TI EXP-LX is a dual processor system which contains a symbolic processor connected via a NuBus to a conventional 68020 processor. The symbolic processor operates in a LISP environment wherein LISP is the higher order language, the operating system and the microcode. The symbolic processor is the master processor. A symbolic processor differs from a conventional processor in the design and architecture of the control unit which is optimized to execute LISP microcode. The conventional processor operates in the UNIX environment (UNIX System V). A number of communication protocols are supported between the processors including shared memory. Compilers are available on the UNIX processor for FORTRAN and C.

The TI-EXP-LX, MASSCOMP 5400 and SEL computers communicate via ETHERNET. The ATMS System hardware configuration is shown in Figure 1 below and described in more detail in section 5.0.

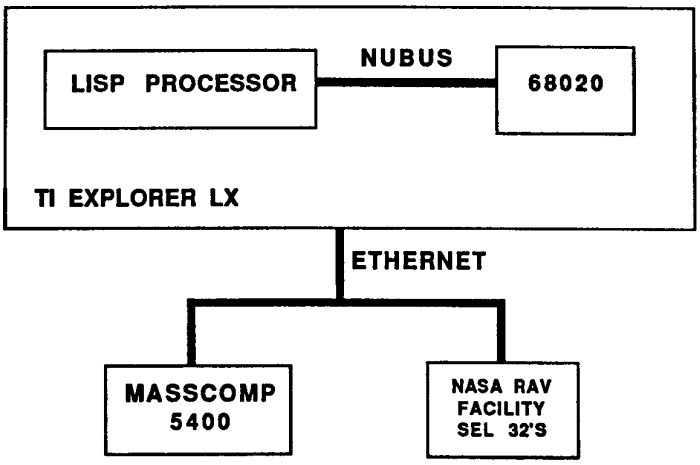

Figure 1 Hardware Configuration

4.2 ATMS Software

The main software components of the Phase I ATMS are a flight test trajectory generator (FTTG) based on a flight test trajectory control (FTTC) system developed under previous contracts [References 8 and 9], a flight test planning expert system, a man/machine interface, and a flight test monitoring expert system. In follow on phases of ATMS development, plans are to add inflight replanning, block planning and program planning expert systems. The software components described in this section perform the flight planning and monitoring functions shown in Figure 2. The fully developed ATMS to be developed in follow on phases is shown in Figure 3.

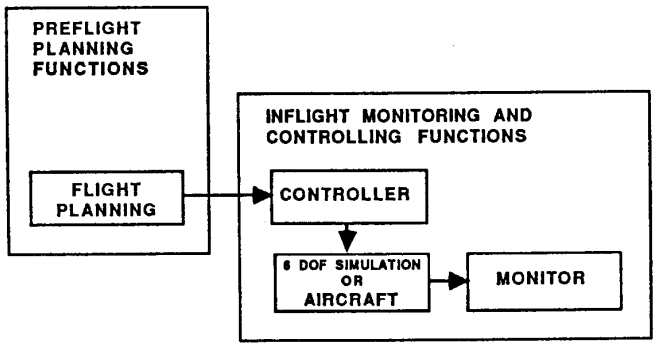

Figure 2 Current ATMS Functions

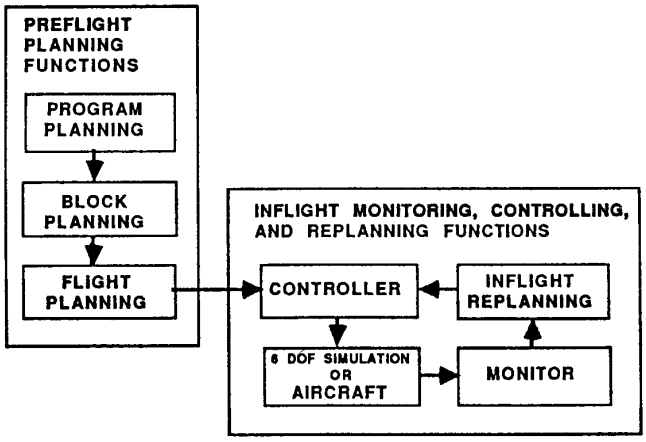

Figure 3 ATMS Functions

4.3 Flight Test Trajectory Generator (FTTG)

The flight test trajectory generator (FTTG) is a collection of outer-loop guidance control laws which provide precise control for a vehicle performing high-quality flight research maneuvers such as level accelerations, wind-up turns, and pushover-pullup maneuvers. The FTTG provides outer loop control of a 6 degree-of-freedom (6 DOF) F-15 simulation or the F-15 flight test airplane itself. In the Phase I ATMS system only the F-15 simulation was controlled. The FTTG is algorithmic, implemented in FORTRAN 77, and executes on a numeric processor along with the F-15 simulation. In ATMS Phase I the FTTG is hosted in a MASSCOMP 5400 and in a SEL 32/87.

The interface between the FTTG and the remaining components of the ATMS has been designed to minimize the bandwidth of the communications across that interface. The FTTG accepts input commands consisting of an ordered list of maneuvers by type. Each maneuver consists of a trim point, maneuver conditions, and end conditions. These commands contain from three to seven parameters each.

Once maneuver commands are received by the FTTG, the FTTG operates independently of the ATMS until another command list is received. The FTTG generates trajectories and trajectory-following controls based on the maneuver commands and the aircraft instrumentation. The communication between the FTTG and the aircraft (or aircraft simulation) requires commands comparable to those which would be used by a pilot in controlling an aircraft (stick, pedal, and throttle commands). These aircraft commands must be computed every 20 ms during real-time operation.

Figure 4 shows the components of the FTTG. Figure 5 shows a functional block diagram of the FTTG.

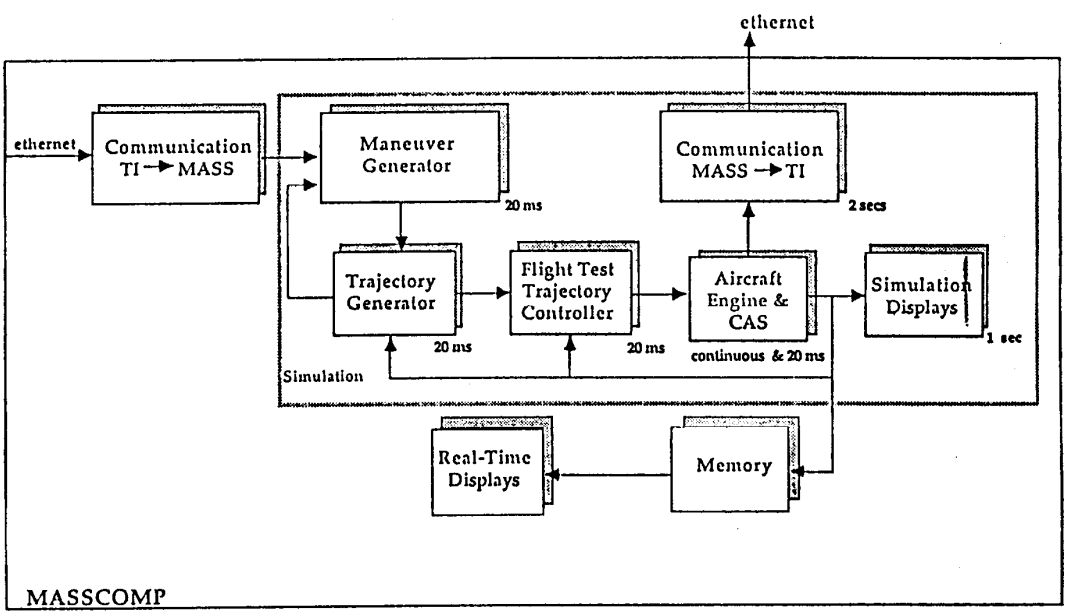

Figure 4 FTTG Components

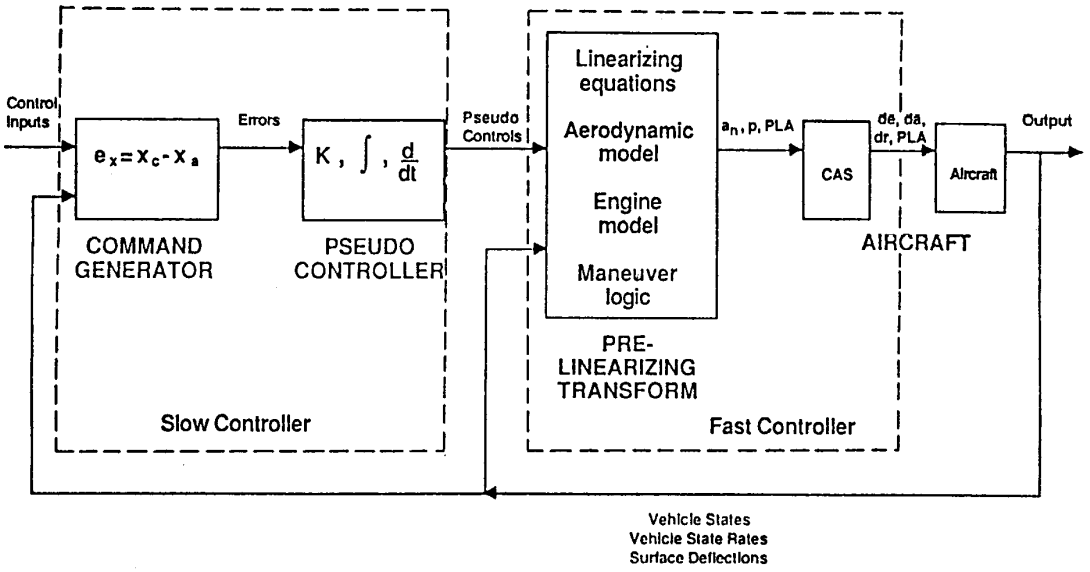

Figure 5 FTTG Functional Block Diagram

The FTTG accepts maneuver commands and uses the information contained in those commands to select command generation and pseudo-controller algorithms. The command generator also uses the trim point and maneuver condition information as well as aircraft state information to generate the requested trajectory. Aircraft (or simulation) measurements are used by the FTTG to determine trajectory error data which are sent to the pseudo-controller. The pseudo-controller converts trajectory error data into aircraft state commands. The command generator and pseudo-controller operate on a frame time of approximately 100ms and are referred to collectively as the 'slow controller.'

The Phase I FTTG can perform the following flight test maneuvers automatically:

1. Level acceleration/deceleration
2. Constant dynamic pressure, constant load factor turn
3. Zoom and pushover
4. Pushover-pullup
5. Excess thrust windup turn
6. Constant thrust windup turn
7. Straight flight segment
8. Turning flight segment

The Phase I ATMS expert system planner allows the flight test engineer to input all the above maneuvers except 2 and 3. The inputs required by the FTTG to perform these maneuvers are given in Table 1 below. They consist of a trim point (initial altitude and Mach), final conditions, and various maneuver parameters as a function of the maneuver type (1 through 8 above).

Maneuver Condition	Maneuver Type 1	2	3	4	5	6	7	8
Initial Mach	x	x	x	x	x	x	x	x
Initial Altitude	x	x	x	x	x	x	x	x
Final Mach	x				x	x		
Final Alpha				x	x	x		
Final Altitude	x				x	x		
Minimum Alpha				x				
Distance to be Traversed							x	
Desired Heading								x
Turn Direction					x	x		x
Final Throttle						x		
Mach Rate	x							
Alpha Rate				x	x	x		
Final Condition Hold Time	x	x	x	x	x	x		

Table 1

These conditions are sent via ETHERNET for each maneuver to the FTTG by the ATMS expert system on command of the flight test engineer to generate trajectories. They are sent in the form of an ordered list for the list of maneuvers to be performed.

The components of the FTTG collectively referred to as the 'fast controller' are the pre-linearizing transformation equations and the aircraft (or simulation model) primary flight control system. The pre-linearizing transforms operate on a 20ms frame time and compute an inverse aircraft model which results in normal acceleration (a_n), roll rate (p), and throttle (PLA) commands. In the flight system, these commands are transmitted to the aircraft using the telemetry uplink system. The a_n and p commands are inserted into the primary control system downstream of the stick-shaping and pilot-input pre-filters. The output of the primary control system are surface commands (δ_a, δ_e, δ_r). The PLA commands are sent directly to the engine control system.

The output of the F-15 simulation is a state vector with the following elements available every 20 ms.

1. Time
2. Altitude
3. Velocity
4. Mach Number
5. Fuel Used
6. Angle of attack
7. Delta Heading
8. Load Factor
9. Arc Distance

The data stream definition over ETHERNET between the LISP processor on the TI-EXP-LX and the MASSCOMP 5400 or NASA SIM is shown in Figure 6.

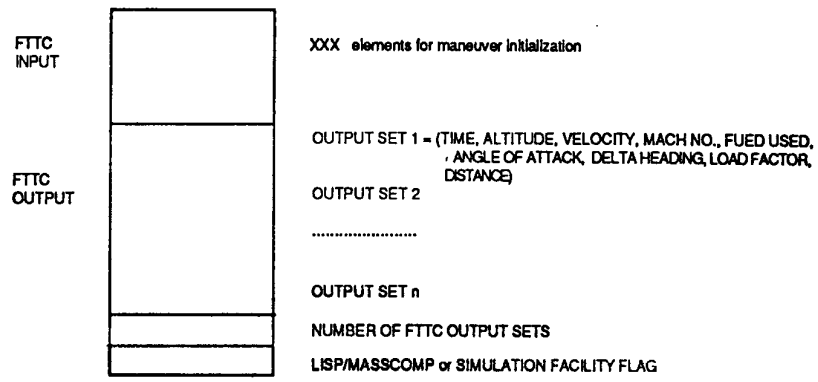

Figure 6 F-15 Sim. Output Data Stream Definition

4.4 Flight Test Planning Expert System

Flight test planning must be done at several levels. At the highest level, the flights required for an entire program are established by the project requirements. At the next level, blocks of flights are determined by a more detailed analysis of the project requirements and are partitioned according to similarity of prerequisites, flight envelope requirements, and test needs to establish an orderly progression of blocks of flights satisfying the high-level project requirements. Within each block a number of individual flights are identified based on the detailed analysis of maneuvers required to satisfy the block requirements. Individual flights are then identified with a number of these maneuvers and the FTE must order maneuvers within a flight based on considerations of range, fuel, and energy management, as well as maneuver priorities.

The ATMS will ultimately contain program block and flight planning capabilities. However, for Phase I of the program only the flight planner has been implemented in the test planner expert system. The test planner accepts a list of maneuvers which represents up to the equivalent of approximately two flights of maneuvers, and orders them using rules that consider maneuver priorities, energy management, test range boundaries, and envelope limitations. Maneuvers which cannot be included in the flight plan are eliminated from the current plan.

A detailed functional flow diagram of the flight test planing expert system is shown in Figure 7.

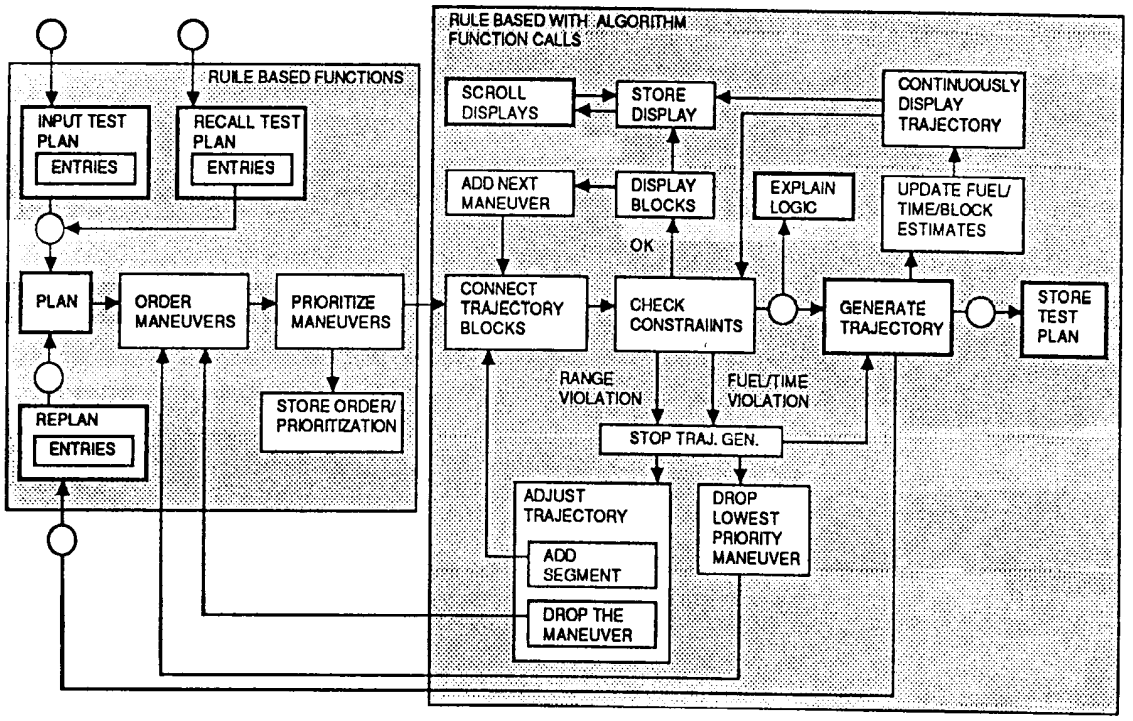

Figure 7 Functional Flow Diagram of the Flight Test Planning Expert System
(= user action required)

This diagram attempts to show, in sequential order, a model of the logical flow within the flight test planning expert system implemented by the rules within its knowledge base. The flight test planning expert system accepts test plan inputs from the FTE using the menu driven and icon-based man/machine interface (see Section 3.3) or previously stored test plan entries. When the list of test maneuvers is entered into the ATMS, the FTE selects the flight test planning expert system which then uses its knowledge base to order maneuvers, prioritize maneuvers, and construct a trajectory. As each maneuver is added to the planned trajectory, it is tested to insure that no system constraints have been violated. When constraint violations occur, the flight test planning expert system displays information to the FTE describing the constraint violations and provides an explanation of the constraint, if requested. Maneuver priority is extremely important when fuel constraints are tested: lower priority maneuvers are removed from the test plan to satisfy fuel constraints.

The ATMS Phase I planner contains 40 rules for ordering a list of flight test maneuvers. Two levels of planning have been implemented in Phase I. In Level 1 the planner pays no attention to range constraints or operating areas. The planner orders the maneuver list it is given so that higher priority maneuvers are done before lower priority maneuvers, higher altitude maneuvers are done before lower altitude maneuvers and higher speed maneuvers are done before lower speed maneuvers in that order: that is, priority has precedence over altitude which , in turn, has precedence over speed. In Level 2 the planner injects turns and straight line segments into the maneuver list at appropriate points to keep the trajectory within the chosen operating area (default

to R-2515 in Phase I). Fundamentally, the planner runs the flight test back and forth between two end points which are input by the user while adding additional turns to stay within R-2515. This logic is not meant to be the final ATMS logic. Rather it was implemented to verify ATMS communication interfaces and functional flow. The full ATMS expert system planner will be developed in follow-on phases and will be far more sophisticated in its logic patterns. The inputs to the planner include:

1. The list of flight test maneuvers including all maneuver conditions.
2. The test range in which the trajectory must be contained. In Phase I this defaults to R-2515.
3. The level of planning desired.
4. The entry point (Mach and altitude) to start the flight test.
5. The turn point to reverse course.
6. The exit point to go to when the last maneuver is completed.

The entry and turn points are the two end points discussed earlier. Thinking time is also an input parameter, but it is not implemented in Phase I. Its function is to limit the time allotted for the expert system to reach a solution. In other words, the expert system must give the best solution possible within the time specified. Fuel and range time goals are also input parameters which are not implemented in Phase I. The final system will be able to select the maneuver list order which attempts to minimize fuel used or range time used.

The output of the planner is an ordered list of maneuvers. Normally, this ordered list is then input to the FTTG which exercises the 6 DOF simulation to generate a trajectory.

We must emphasize that the planner is not a numeric optimization routine. An optimization algorithm mathematically seeks to minimize a performance measure (objective function, performance index etc) through a numerical directed search. First order (steepest descent) and second order (Newton-Raphson) gradient methods, dynamic programming and other search algorithms are popular. An expert system seeks to find suboptimal solutions by reasoning through a knowledge base composed of facts which may contain numbers or symbols. The reasoning search is done in much the same manner that a human reasons. The process involves continually making inferences based on the present state of the knowledge base until a satisfactory solution state can be inferred. The knowledge base is changed (expanded or contracted) as inferences are made. The numerical concepts of linearity and convexity which play such a heavy role in optimization, have no bearing on the inference process.

The flight test planning expert system was developed using the Automated Reasoning Tool (ART) expert system development environment hosted on a TI Explorer LX computer. ART offers a large number of language extensions to LISP, an inference engine, a graphics support package, a very sophisticated editor all contained within the ART software development environment. The inference engine is the heart of the system. LISP as a language does not contain an inference engine. ART is one of the few sophisticated development environments available (KEE, OPS 5, MUSE are others).

Two ART constructions were of particular interest to the research team for application to ATMS. First, the SCHEMA system for organizing and managing facts provides a mechanism for associating facts which have attributes in common. Second, the VIEWPOINTS system provides a mechanism for implementing hypothetical reasoning in planning. Both of these capabilities are unique to ART and were used extensively in Phase I ATMS for the expert system and man-machine interface.

4.5 Man/Machine Interface (MMI)

4.5.1 ATMS MMI

The man/machine interface (MMI) component of the ATMS provides a means of information entry and display. This interface is used during both flight planning and flight plan execution. The main display has three major components: the map, timeline, and command menu. It is shown in Figure 8.

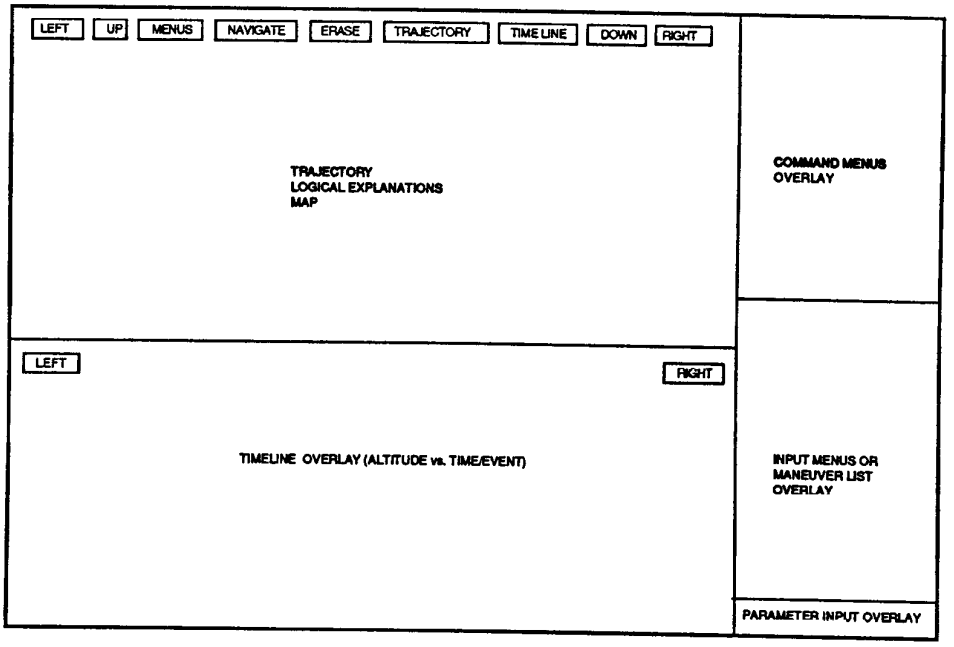

Figure 8 Layout of Top-level Display

In the map section of the main display the trajectory planning display shown in Figure 9, displays trajectories as they are generated by the FTTC and the simulation or real airplane. The map display presents a two-dimensional view of the test range including all distinguishing landmarks, range boundaries, operating areas, towns, and airports with the aircraft trajectory superimposed.

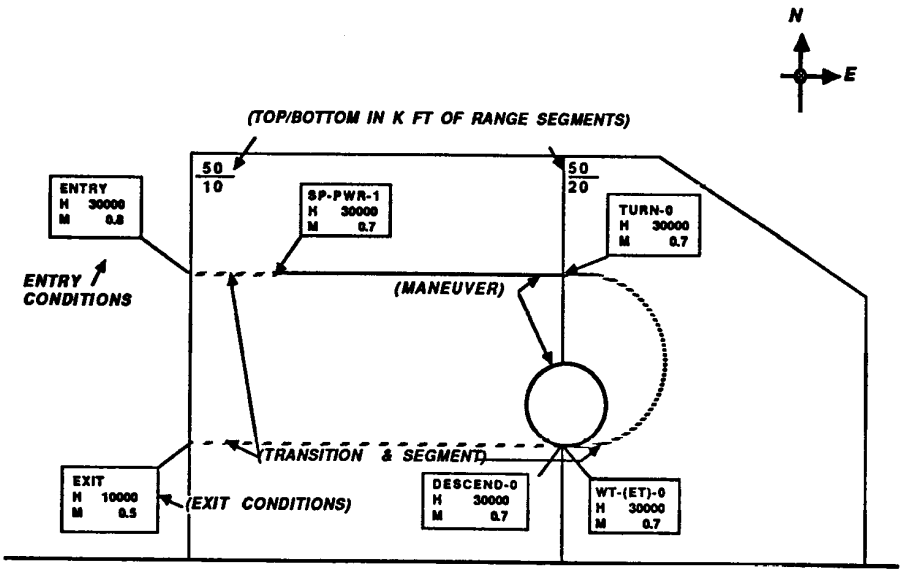

Figure 9 Trajectory Map Display

The stored map is larger than the portion presented on the display. Pan and scroll are accomplished by mousing an appropriate button depicted across the top of the display. A "navigate" button is also included to quickly determine course and distance between present aircraft position and any point within the stored map. The timeline component of the main display presents information on the aircraft trajectory in terms of altitude versus time or events. Figure 10 shows a timeline display of altitude versus time. Timeline scroll buttons allow the FTE to examine different time or event segments by scrolling the timeline. The command menu portion of the main display allows the user to select (using "mouse" or keyboard inputs) ATMS operational modes, maneuvers, or explanations of ATMS actions. Explanations of ATMS action are displayed in the map portion of the main display.

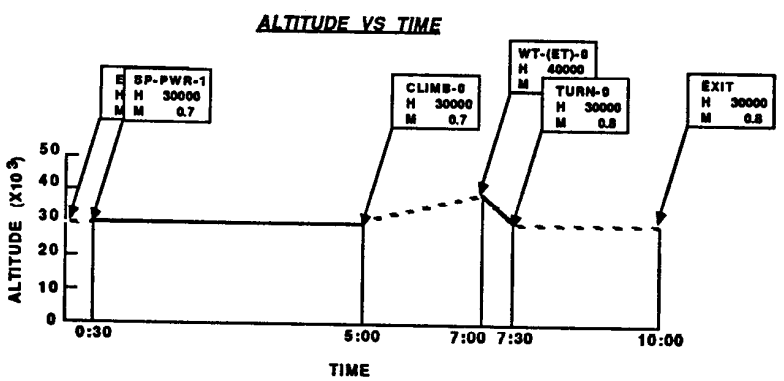

Figure 10 Timeline Display

This display is also used to provide the FTE the trajectory which results by invoking the flight test planning expert system. The trajectory planning display (Figure 9) is used to monitor the performance of the aircraft (or aircraft simulation) during the execution of the flight plan.

The timeline display (Figure 10) is used to present the FTE with a history of the planned or executed trajectory of the vehicle. By presenting an altitude versus time or event scroll-plot, the ATMS allows the FTE to understand the energy management aspects of the maneuvers. This display also provides an easy reference to the events of the flight or flight plan.

The command menu portion of the main display provides the user with a hierarchical display of option menus for ATMS operational mode selection. Figures 11, 12, 13 and 14 show the elements of this hierarchy for entering maneuvers for a test plan. An explanation of all the menu items is contained in the next section.

4.5.2 ATMS Operations

The ATMS Phase I system is activated by loading the file ATMS-EXEC.LISP from the ART interface on the TI EXP-LX. After considerable delay for loading, compiling and resetting, a title window appears followed by two questions which the FTE must respond to. First, the FTE is asked whether or not he intends to run DPS. Second the FTE is asked whether or not he intends to run 6 DOF simulations on either the MASSCOMP or the NASA SIM. The MASTER menu then appears. At the first level (Figure 11), the Master Menu allows the FTE to pick among a number of planning options. These options are explained below.

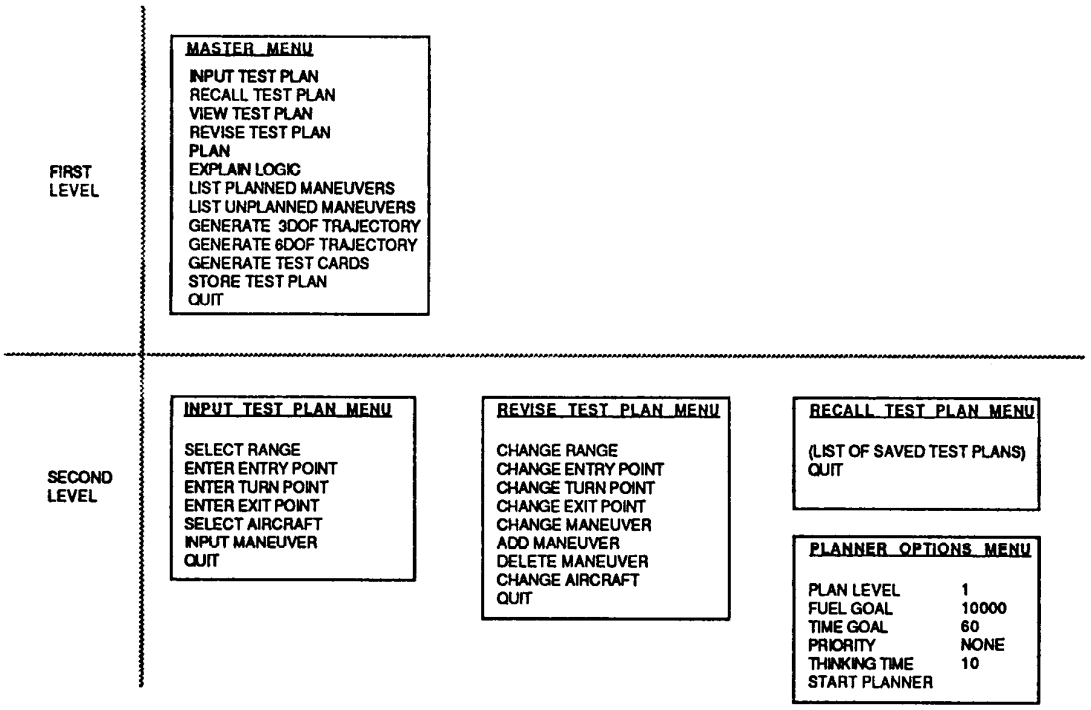

Figure 11 First and Second Level Menus

INPUT TEST PLAN - Selecting this item causes the MMI to display the INPUT TEST PLAN menu. From this menu the FTE can input all of the elements of a test plan.

RECALL TEST PLAN - Selecting this item causes the MMI to list all of the test plans filed on disk. This item is not functional in the Phase I ATMS system.

VIEW TEST PLAN - Selecting this item causes the test plan in main memory (the current plan) to be viewed in its entirety on a series of windows. This item is not functional in the Phase I ATMS system.

REVISE TEST PLAN - Selecting this item causes the MMI to display the REVISE TEST PLAN menu in preparation for accepting FTE inputs to revise the current plan.

PLAN - Selecting this item causes the MMI to display the PLANNER OPTIONS menu in preparation for initiating the ATMS Phase I planner.

EXPLAIN LOGIC - Selecting this item causes the MMI to display the logic the planner used to plan the last maneuver list. This item is not functional in the Phase I ATMS system.

LIST PLANNED MANEUVERS - Selecting this item causes the MMI to display the planned maneuver list, if one has been generated in the current session. The planned maneuver list is the list of maneuvers planned by the ATMS Phase I planner.

LIST UNPLANNED MANEUVERS - Selecting this item causes the MMI to display the maneuver list of all the maneuvers that were discarded by the planner (if any) in planning the last flight test.

GENERATE 3 DOF TRAJECTORY - Selecting this item causes the MMI to send the planned maneuver list and all maneuver conditions to shared memory and trigger DPS to generate a trajectory. DPS is hosted on the UNIX processor in the TI EXP-LX. As each maneuver on the maneuver list is executed in DPS, trajectory data is stored in shared memory where it is used by the MMI to create a spline which is, in turn, displayed on the map and timeline. In the MMI all this activity is contained in two rules. One of the rules is fired over and over until all the maneuvers on the planned maneuver list have been executed. A label is also generated in this rule which lists the maneuver type and entry conditions (Mach and altitude) for each maneuver. The label is pasted near and points to the starting point of the maneuver on both the timeline and trajectory map. Some time before this selection is made, the FTE must initiate TI EXP-LX UNIX processor operation. The procedure is explained in TI documentation.

GENERATE 6 DOF TRAJECTORY - Selecting this item causes the MMI to send the planned maneuver list via ETHERNET to the MASSCOMP or NASA SIM and triggers the FTTG to generate a trajectory by exercising the F-15 6 DOF simulation. The action is similar to that taken to generate a 3 DOF trajectory. Whether or not the MASSCOMP or the NASA SIM is used has been selected previously by the FTE in response to a prompt generated by the MMI on ATMS startup. Spline data is generated and displayed every X data points as opposed to every maneuver as in the 3 DOF case. Priot to responding to the ATMS startup questions, the FTE must initiate MASSCOMP or NASA SIM operation.

GENERATE TEST CARDS - This item is not functional in the Phase I ATMS system.

STORE TEST PLAN - Selecting this item causes the current test plan to be filed on disk for future use. It is not functional on the Phase I ATMS system.

QUIT - Selecting this item causes the MMI to return the FTE to the ART interface on the TI EXP-LX.

All of the second level menus and the options available in each are also shown in Figure 11. We will cover each second level menu in turn in the following paragraphs.

The INPUT TEST PLAN menu allows the FTE to create a test plan to be input to the planner. There are six selections on this menu. They are explained below:

SELECT RANGE - Selecting this item causes a list of ranges to be displayed on a RANGE menu (see Figure 12). The only programmed range in the Phase I ATMS system is the Western Aeronautical Test Range. It is mapped from San Bernadino to Owens Lake and from Barstow to Bakersfield. All major towns, airports, runways, VORTACS, lakes, dry lakes and operating areas are shown. Twelve o'clock on the displayed map represents NASA North (as opposed to magnetic or true North) and cannot be altered. The map is bigger than that which can be displayed on one monitor screen by a factor of four. The screen can be scrolled and panned to shown the entire mapped range.

ENTER ENTRY POINT - A flag is shown on the map display which represents the point at which the flight test trajectory commences. The flag contains the Mach number and altitude of the entry point. It is meant to represent the point at which the flight test aircraft enters an operating area, however, it can be located anywhere on the screen. Selecting this item causes an entry point window to be displayed. This window contains information (see Figure 13) regarding the location of the entry point and the flight conditions at that point. Selecting POSITION in this window (by mousing on the word POSITION with the left mouse button) allows the FTE to "drag" the entry point with the mouse (holding the left mouse button depressed) to any point on the screen and "dump" it. Selecting any other selection allows the FTE to change either the entry point location or the entry point flight conditions (Mach, altitude ,heading). The FTE "mouses" on the figure to be changed (with the left mouse button) and enters the change desired. The entry point location is given in terms of radial and distance (nautical miles) from the Edwards VORTAC. Dragging the entry point changes these parameters automatically. Alternatively, changing the parameters directly causes the entry point to be redisplayed at the new position when the FTE selects ENTER. Selecting ENTER burys the ENTRY POINT window and makes any changes in entry point location previously selected.

ENTER TURN POINT - A flag is shown on the map display which represents the point at which the flight is meant to reverse course after proceeding to it from the entry point. The turn point location can be changed in an entirely analogous manner to the ENTRY POINT.

ENTER EXIT POINT - The exit point is entirely analogous to the TURN and ENTRY POINTS. It is meant to be the point at which the flight test aircraft either exits the operating area or completes the flight test. It is initially positioned (default) at the initial point for runway 22 at Edwards.

SELECT AIRCRAFT - Selecting this item displays a TEST AIRCRAFT menu which contains a number of test aircraft operated by NASA Ames-Dryden. Two options are implemented in the Phase I ATMS system. They are the HIDEC F-15 and a Generic Hypersonic Research Vehicle (HRV). When one of these test aircraft are selected an aircraft window is displayed (see Figure 12) which shows default values for a number of aircraft parameters for that particular aircraft. These default values can be changed by the FTE by mousing on the value being displayed

and entering a new value. The parameters displayed include aircraft limits such as Mach, angle-of-attack, altitude; and starting fuel and gross weight.

INPUT MANEUVER - Selecting this item allows the FTE to construct the maneuver list prior to initiating the planner. We will discuss maneuver inputs in a following section.

QUIT - Selecting this items returns the FTE to the MASTER menu.

The REVISE TEST PLAN menu allows the FTE to change a number of parameters in the test plan. Generally, it is most useful if a plan has already been entered and planned by the planner. The entries are self-explanatory and should need no further explanation. Many of the items on this menu can be exercised from the INPUT TEST PLAN menu as well.

The RECALL TEST PLAN menu displays the test plans currently filed on disk. The menu is displayed as a result of the FTE's selection of RECALL TEST PLAN on the MASTER menu. Mousing on one of the filed test plans causes the plan with its planned maneuver list to be recalled. It also causes entry, turn and exit points to be repositioned and aircraft and range parameters to be changed. It does not cause a trajectory to be displayed. The FTE must exercise GENERATE 3 DOF TRAJECTORY or GENERATE 6 DOF TRAJECTORY from the MASTER menu to cause a trajectory to be generated and displayed. This function is not implemented in the Phase I ATMS system.

The PLANNER OPTIONS menu displays several planner options. The menu is displayed when the FTE selects (mouses on) PLAN in the MASTER menu. PLAN LEVEL refers to the level of planning performed by the planner. This was explained in section 4.4 previously. The FTE can change the default (1) to 2 by mousing on the 1 and typing 2. This causes the planner to automatically proceed to the second level of planning after the first level of planning is completed. In the second level of planning the planner automatically uses DPS to generate a trajectory. The FUEL GOAL and TIME GOAL tell the planner how much fuel the aircraft should have on-board at the entry point and the amount of range time available. As the last step, the planner will check the fuel state of the aircraft and the range time used. In the Phase I ATMS system, if the fuel state is below 2000 lbs or the range time has been exceeded, the planner will drop the last maneuver performed from the plan. If one of these two parameters is still exceeded, the next to last maneuver is dropped. This simple logic will be refined extensively in follow-on phases. The PRIORITY goal allows the FTE to tell the planner to pay attention to the priorities assigned to each maneuver by the FTE when the maneuvers were input. Once the FTE is satisfied with the entires on this menu, he starts the planner expert system by selecting (mousing on) START PLANNER.

Figure 12 shows the third level menus available. All have been explained previously except two - the WESTERN AERO AREAS menu and the MANEUVER menu. The WESTERN AERO AREAS menu lists all the operating areas in this range. The boundaries of all of these areas are shown on the map display. SSC stands for Supersonic Corridor. Mousing on selected items includes that area in the range boundary definition for the flight test. The default is R-2515. The flight test planner will not allow a trajectory to violate a range boundary during the planning level 2 planning process and the flight test monitor will issue a warning and create a flag on the screen when a monitored flight test violates a range boundary. The MANEUVER menu items are explained in section 4.5.3 below.

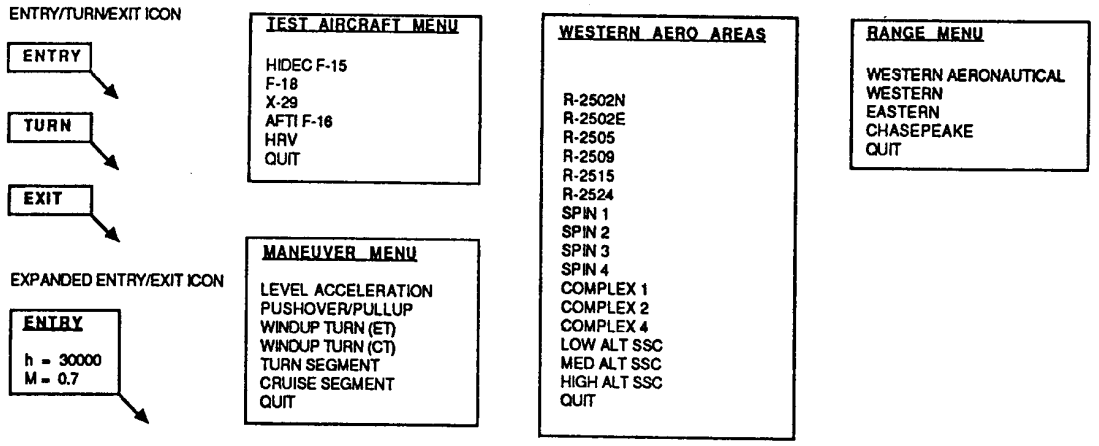

Figure 12 Third Level Planning Menus and Icons

Figure 13 depicts the entry, turn and exit point selection windows. The items have been explained previously.

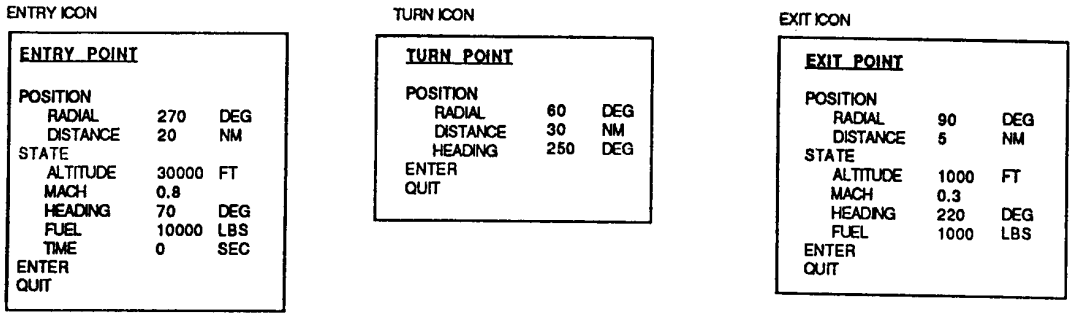

Figure 13 Entry, Turn, Exit Icons

4.5.3 ATMS Phase I Flight Test Maneuvers and Maneuver Segments

The MANEUVER menu contains a list of all the maneuvers which the Phase I ATMS system will accommodate. On selecting a maneuver to add to the unplanned maneuver list, the FTE is presented with one of the maneuver windows listed in Figures 14 or 15. The list contains default values for all the parameters required to define the maneuver for the FTTG. Many of the parameters list tolerance bounds after the parameter. All the parameters and tolerance bounds can be changed by the FTE by mousing on the figure to be changed and entering a new figure. AREA

refers to the operating area the FTE desires the maneuver to be performed in. If the default value (ANY) is not changed, the maneuver will be planned to be executed within the range boundaries previously defined. Selecting ENTER (mousing on the word ENTER) causes the maneuver to be labelled automatically and entered on the unplanned maneuver list. In addition, the maneuver window disappears and the MANEUVER menu reappears. Selecting QUIT causes the MANEUVER menu to reappear and the maneuver window to disappear without the maneuver being added to the list. The label applied automatically to the maneuver when ENTER is selected shows the type of maneuver followed by a number which is incremented (starting from 0) when another maneuver of that type is input. For example, the first level acceleration entered is labelled LEVEL-ACCEL-0, the second is labelled LEVEL-ACCEL-1, etc. These labels stay with the maneuvers during all future operations. That is, the unplanned maneuver list would contain the following list of maneuvers entered in order:

.....
LEVEL-ACCEL-0
.....
.....
LEVEL-ACCEL-1

whereas the planned maneuver list (after the planner has reordered the list) might look like the following:

LEVEL-ACCEL-1
.....
LEVEL-ACCEL-0
.....
.....

All maneuvers contain performance estimates which reflect the fuel, time and space required to perform the maneuver listed. These values are meaningless in the Phase I ATMS system.

LEVEL ACCELERATION ICON

```
LEVEL ACCELERATION

MANEUVER PRIORITY  NONE
TRIM POINT
      h = 30000 + 20 ft
      M = 0.8   + 0.01
MANEUVER CONDITIONS
      dV/dt = 5  + 0.1 k/s
END CONDITIONS
      M = 0.9
PERFORMANCE ESTIMATES
      FUEL  = 1000 lbs
      TIME  = 15 sec
      SPACE = 2 nm x 1000 ft
AREA          ANY
ENTER
QUIT
```

PUSHOVER/PULLUP ICON

```
PUSHOVER/PULLUP

MANEUVER PRIORITY  NONE
TRIM POINT
      h = 30000 + 20 ft
      M = 0.8   + 0.01
MANEUVER CONDITIONS
      dA/dt = 1.0  + 0.01 deg/s
      AOAF = 20 DEG
      AOAMIN = -5 DEG
PERFORMANCE ESTIMATES
      FUEL  = 1000 lbs
      TIME  = 15 sec
      SPACE = 2 nm x 1000 ft
AREA          ANY
ENTER
QUIT
```

WINDUP TURN ICON

```
WINDUP TURN

MANEUVER PRIORITY  NONE
TRIM POINT
      h = 30000 + 20 ft
      M = 0.8   + 0.01
MANEUVER CONDITIONS
      dA/dt = 1.0  + 0.01 deg/s
      dN/dt = 0.5  + 0.01 g/s
      FPLA  = 130 deg
END CONDITIONS
      A  = 20 deg
      Nz = 7 g
      DPSI = 360 deg
      DT = 5 sec
PERFORMANCE ESTIMATES
      FUEL  = 1000 lbs
      TIME  = 15 sec
      SPACE = 2 nm x 5000 ft
AREA          ANY
ENTER
QUIT
```

Figure 14 Maneuver Icons

TURN ICON

```
TURN SEGMENT

FOLLOWS
END CONDITIONS
      PSI = 90
MANEUVER CONDITIONS
      NZC = 1.15
      PHI = 30 deg
PERFORMANCE ESTIMATES
      FUEL = 1000 lbs
      TIME = 15 sec
      SPACE = 5 nm x 5 nm ft
AREA          ANY
ENTER
QUIT
```

CRUISE ICON

```
CRUISE SEGMENT

FOLLOWS
END CONDITIONS
      dist = 20 nm
PERFORMANCE ESTIMATES
      FUEL = 1000 lbs
      TIME = 15 sec
      SPACE = 2 nm x 1000 ft
AREA          ANY
ENTER
QUIT
```

Figure 15 Segment Icons

Two additional maneuvers called segments are shown in Figure 15. These maneuvers are meant to be inserted into a planned list of maneuvers by the FTE after a plan has been generated to refine the plan. They are turns through a specified heading change in a specified direction and cruise segments for a specified distance. The planner will ignore these maneuver segments in making up a plan, but the FTE can alter a flight trajectory by inserting them after a plan has been completed. In addition, the planner will create its own segments as it is executing level II planning to keep the trajectory within range boundaries. The FOLLOWS selection allows the FTE to indicate which flight test maneuver he would like the segment chosen to follow. The FTE must select by name one of the planned maneuvers (LEVEL-ACCEL-0 for example).

In addition, the planner automatically inserts TRANSITION maneuvers into the planned list of maneuvers, TRANSITION maneuvers do not appear on any window and are not selectable. They are plotted, however. TRANSITION maneuvers include climbs, descents, accelerations and decelerations which take the flight test aircraft from the end condition of one maneuver to the trim condition of the next maneuver. TRANSITION maneuvers are not required for the FTTG to exercise the 6 DOF simulation or fly the airplane. The FTTG automatically executes these maneuvers as CAPTURE maneuvers. TRANSITION maneuvers are required, however, by DPS to generate 3 DOF trajectories. DPS is not smart enough to execute CAPTURE maneuvers on its own. This the planner generates two lists of planned maneuvers for later use: the PLANNED MANEUVERS LIST and the PLANNED MANEUVERS LIST WITH TRANSITIONS. The planner uses several rules to figure out whether or not a transition maneuver is required. If, for example, the altitude difference between the end condition of one maneuver and the trim condition of the next maneuver is less than 1000 ft, the planner will not execute a climb/descend transition. Likewise Mach number difference must be greater than 0.1 to trigger an accel./decel. transition.

4.5.4 ART (Rule Based) Implementation of the MMI

The man machine interface is rule based (200 + rules) and presented on the TI Explorer LX monitor and keyboard. The interface was developed in ART. The interface has the following modes of operation.

1. Startup
2. Executive
3. Input
4. Planner
5. Stop

These modes are used in control facts to group the rules. Rule groupings speed execution time by limiting the search space in the knowledge base.

All of the map and time line features are represented in ART by facts which are grouped into schema. For example, a runway or a town is represented by a specific type of graphic schema (an icon) which contains all of the information (facts) required to represent the graphic object including its location. To construct these objects extensive use was made of ART graphic primitives available as a part of ARTIST, the ART graphic support package. ARTIST has several levels of implementation: we used the most primitive level after finding that all other levels contained undesirable features.

Extensive use was made in the man-machine interface of the ARTIST window system. ARIST provides a sophisticated window system which allows the user the capability of generating and using an unlimited number of windows in an application. ARTIST provides graphic windows, command windows and menu windows which may be tailored by the developer to perform most any function one can envision.

We can illustrate the power and also a limitation of the ARTIST window system by explaining the method used to implement a map of the Western Aeronautical Test Range. The Range is much larger than is observable on the TI Monitor at any one time. It is implemented using a set of buildup windows as shown in Figure 16. Icons and other graphic images are displayed on these buildup windows which represent quardrants of the range with NASA Ames-Dryden at the center. Portions of the buildup windows are combined into a display window which is shown on the screen as any given time. Panning and scrolling is accomplished by changing the portions of the buildup windows which appear on the display window. Likewise, trajectories are built up on a set of trajectory windows. Portions of the trajectory windows are combined into one trajectory display window which in turn is overlayed onto the display window to show a combined map with flight trajectories overlayed.

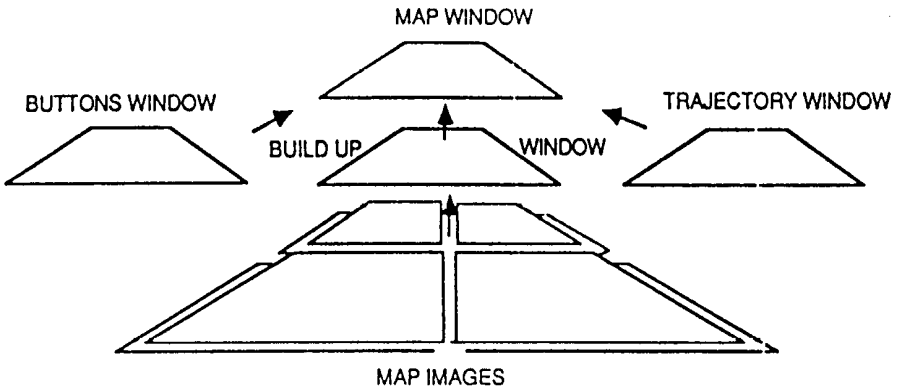

Figure 16 Window System

4.6 Flight Test Monitor Expert System

The flight test monitor expert system provides an interface between the FTE and the actual trajectory (whether generated by simulation or flight). This system also provides the FTTG with inputs from the list of maneuvers in the planned maneuver list. Figure 17 shows a functional flow diagram of the flight test monitor expert system.

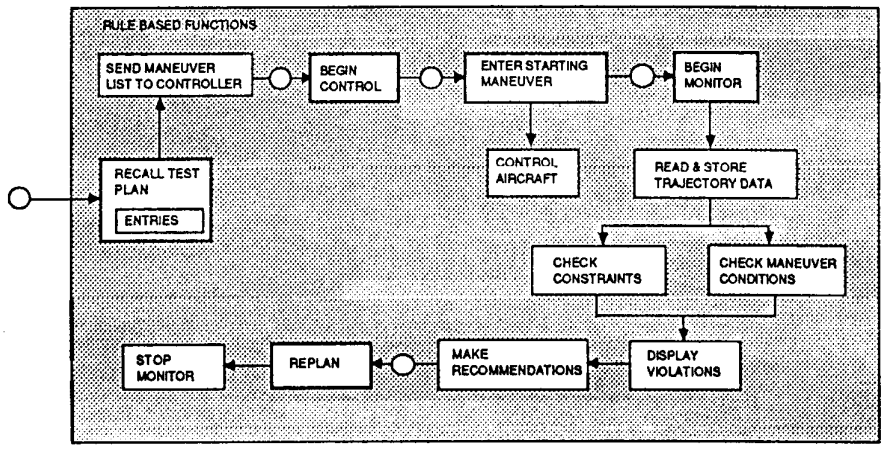

Figure 17 Flight Test Monitor Expert System Functional Flow Diagram

The flight test monitor expert system issues maneuver requests to the FTTG, then monitors the aircraft parameters of interest to insure that no system constraints are violated. This system also monitors maneuver quality. When a system constraint is violated or the quality of a maneuver is unacceptable, the flight test monitor expert system notifies the FTE of the problem and makes recommendations based on the information within its knowledge base. Each maneuver is selected from the list of planned maneuvers in order; the flight test monitor expert system initiates these maneuvers and then waits for the FTTG to finish a maneuver before proceeding to the next maneuver on the list.

In the Phase I ATMS system, the monitor is triggered whenever the FTE generates a trajectory from the FTTG/6 DOF. The monitor prints a message whenever the parameter tolerances specified in the maneuver inputs are violated and whenever the trajectory goes outside the boundary of R-2515 (the default operating area). In follow-on phases the monitor logic will be extensively expanded.

4.7 F-15 Simulations

4.7.1 6 DOF Simulation

The 6 DOF simulation used in the Phase I ATMS system was developed by NASA Ames-Dryden previous to this contract. It employs standard table lookup aerodynamics and simulates the F-15 CAS. It is written in FORTRAN 77. It is resident in the MASSCOMP 5400 and the NASA

SIM in the ATMS system. It executes approximately 5 times slower than real time in the MASSCOMP 5400 and at real time in the NASA SIM.

4.7.2 3 DOF Simulation - Digital Performance Simulation (DPS)

The 3 DOF simulation used in the Phase I ATMS system was developed by AFFTC Edwards AFB and significantly improved by NASA Ames-Dryden. DPS is unique in that time is not the independent variable of integration. The integration variable is a function of the maneuver to be performed and the integration step size is at the discretion of the user. In the Phase I ATMS system, the MMI uses "hard-wired" in integration step sizes for all maneuvers to insure that the maximum number of integration points per maneuver (of 50) is not exceeded. An altitude increment of 1000 feet is used for climbs and descents; a Mach increment of 0.05 is used for accelerations and decelerations; and a heading increment of 10 degrees is used for turns. Follow-on phases will allow the FTE more control over these and other DPS parameters.

DPS is used in ATMS in the "Namelist" mode. That is, the MMI specifies a namelist in shared memory which contains the parameters for the maneuver to be performed. When the maneuver is completed, the MMI alters shared memory to reflect another namelist to initiate another maneuver. The effect is the same as if the FTE were executing a sequence of maneuvers using namelist in DPS on a terminal.

5.0 Automated Flight Test Management System Configurations

The ATMS has three configurations: the FTE Workstation, the simulation validation system, and the flight system. These configurations address the two main applications of the ATMS:

1) flight test planning; and,
2) flight text execution.

The FTE Workstation and the simulation validation system are used to develop and evaluate flight test plans. The simulation validation system is also used to aid in the validation of the flight system including aircraft modifications. The flight system is used to actually conduct flight test by executing the flight test plan, monitoring the performance of the aircraft, and controlling the aircraft in flight.

The partitioning of functions in the ATMS was designed with two goals in mind:

1) minimizing the bandwidth of the communication between components; and,
2) appropriate distribution of functions between numeric and symbolic processing.

5.1 Flight Test Engineer's Workstation

The configuration of the FTE workstation is shown in Figure 18. This system is used by the FTE to develop preliminary flight test plans without having to use the aircraft simulator. This provides the FTE with a stand-alone system that is separate from the aircraft simulator, which is always in great demand, and thus allows more flexibility in test plan development.

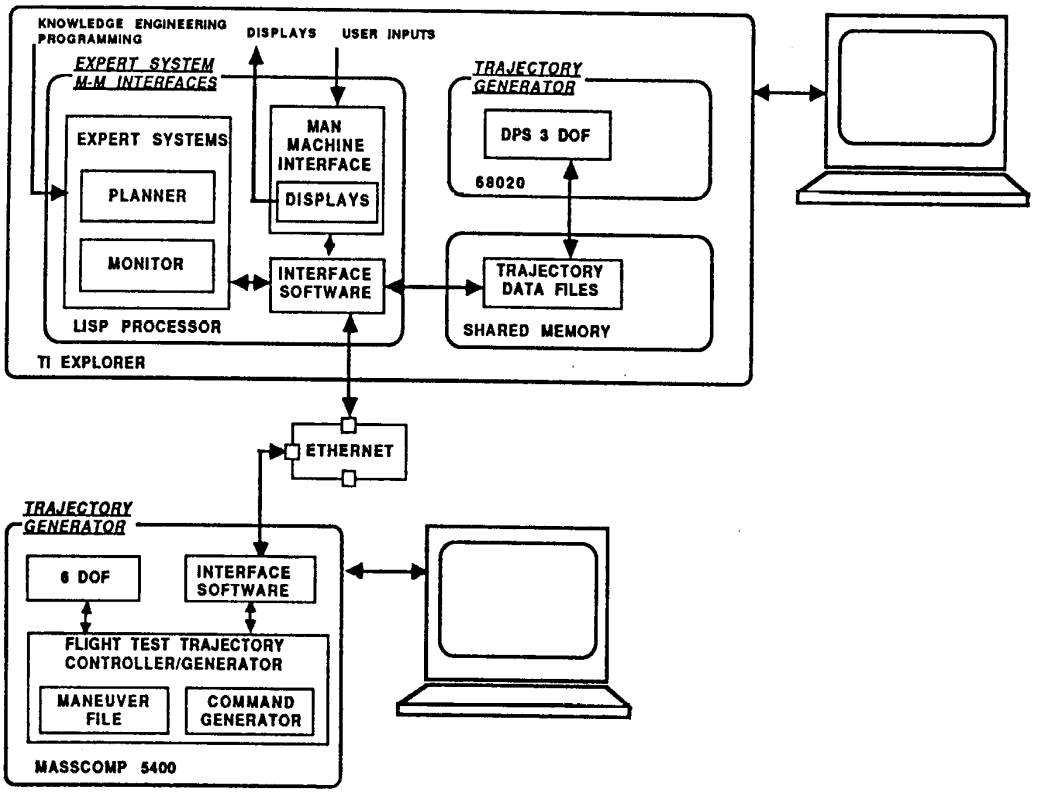

Figure 18 Flight Test Engineer's Workstation

Fig 18

The FTE Workstation includes two computers: a Texas Instruments (TI) Explorer LX and a MASSCOMP 5400. The LISP processor on the Explorer contains the flight test planning expert system, the man/machine interface system, and the rule-based portion of the flight test monitoring expert system. The LX board (which is a Motorola 68020-based system) contains a three degree-of-freedom (3 DOF) Digital Performance Simulation (DPS) and the software to execute the algorithmic, trajectory management portion of the flight test management expert system. The LISP processor and LX board communicate using the NU bus in the Explorer. The MASSCOMP contains a six degree-of-freedom (6 DOF) simulation of the aircraft and the FTTG. The two computers communicate using Ethernet with TCP/IP.

5.2 Simulation Validation System

The configuration of the simulation validation system is shown in Figure 19. This system is used by the FTE to evaluate flight plans developed on the FTE workstation to provide detailed pilot-in-the-loop mission briefing and familiarization, and as a validation facility for testing the ATMS as well as the ground and aircraft systems to be used in the actual flight testing.

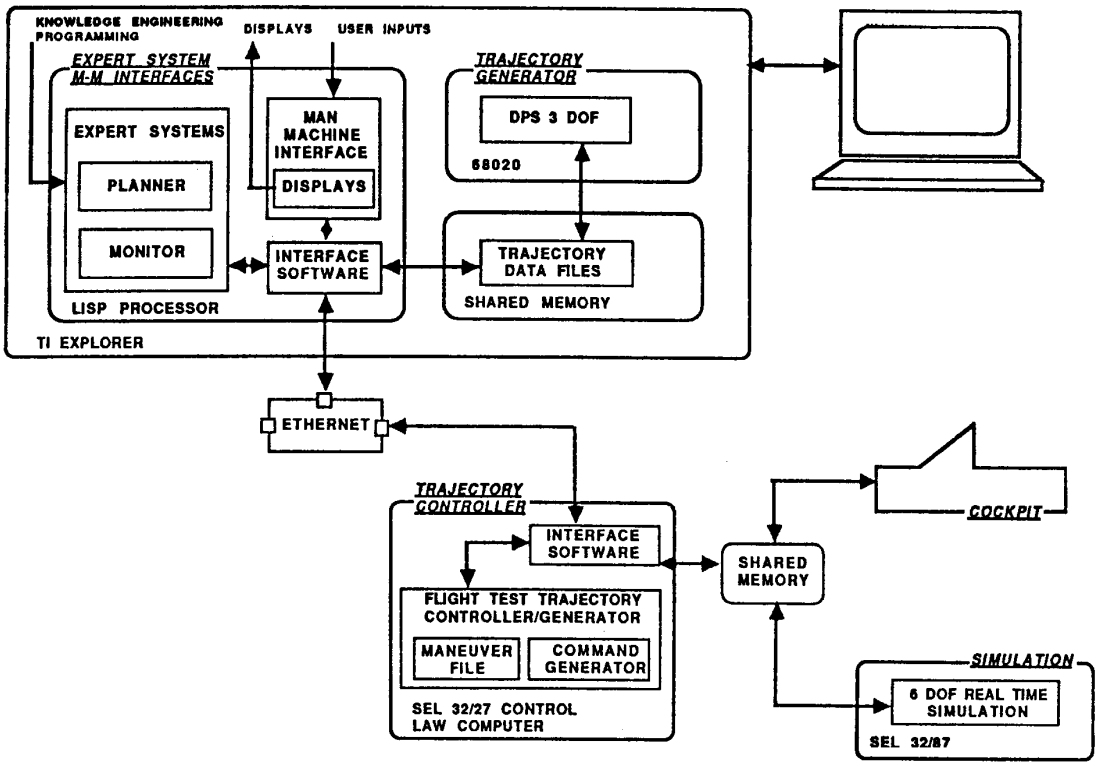

Figure 19 Simulation Validation System

The simulation validation configuration of the ATMS includes three computers: the TI Explorer LX, a GOULD SEL 32/27, and a GOULD SEL 32/87. The TI Explorer LX in the simulation validation system is configured identical to the FTE Workstation configuration of this processor. The SEL 32/27 (designated the "Control Law Computer") contains the FTTG software and communicates with the Explorer using TCP/IP. The communication between the SEL 32/27 and the Explorer is identical to the communication between the Explorer and the MASSCOMP in the FTE Workstation configuration. The SEL 32/87 contains a detailed 6 DOF simulation of the aircraft and also contains detailed models of the downlink and uplink telemetry system. The two SEL computers communicate in engineering units through FORTRAN named common blocks using a two-port shared memory.

5.3 Flight System

The configuration of the ATMS flight system is shown in Figure 20. The flight system is used to actually conduct flight test by executing the flight test plan, monitoring the performance of the aircraft, and controlling the aircraft in flight.

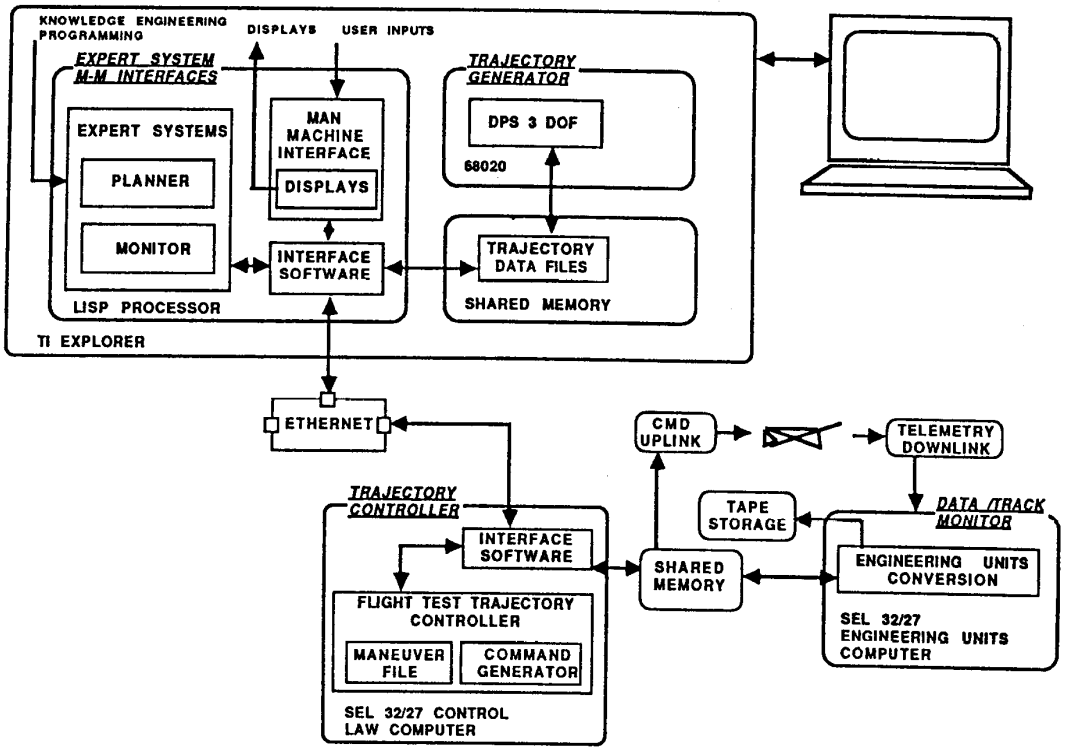

Figure 20 Flight System

The flight system configuration of the ATMS includes three computers: the TI Explorer LX and two GOULD SEL 32/27s. The TI Explorer LX in the flight system is configured identical to the FTE Workstation and simulation validation system configurations of this computer. The SEL 32/27 Control Law Computer contains the FTTG software and communicates with the Explorer using TCP/IP. The communication between the Control Law Computer and the Explorer is identical to the communication between the Explorer and the Control Law Computer in the simulation validation system configuration. A second SEL 32/27 (designated the "Engineering Units Computer") is included in the flight system and provides processing required for the uplink and downlink telemetry systems. The communication between the two SEL computers is identical to the communication between the two SEL computers in the simulation validation configuration. In the flight system, the simulation model of the aircraft and telemetry systems are replaced with actual systems.

5.4 System Network Communications

Figures 21, 22 and 23 show the communication architecture for the Phase I ATMS system. In the FTE Workstation configuration the TI EXP-LX communicates with the MASSCOMP 5400 via ETHERNET with TCP(IP) protocol (direct data I/O) (Figure 21). In the Simulation Validation

and Flight Systems the TI EXP/LX communicates with a SEL 32/27 in the NASA SIM via ETHERNET with TCP(IP) protocol (direct data I/O) (Figure 22).

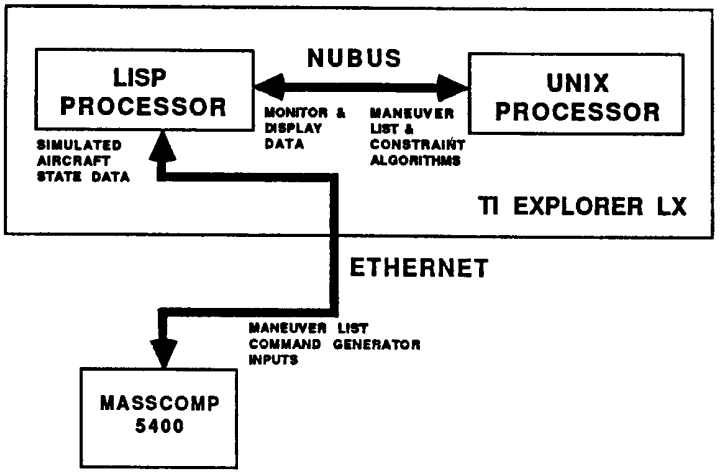

Figure 21 FTE Workstation Communication

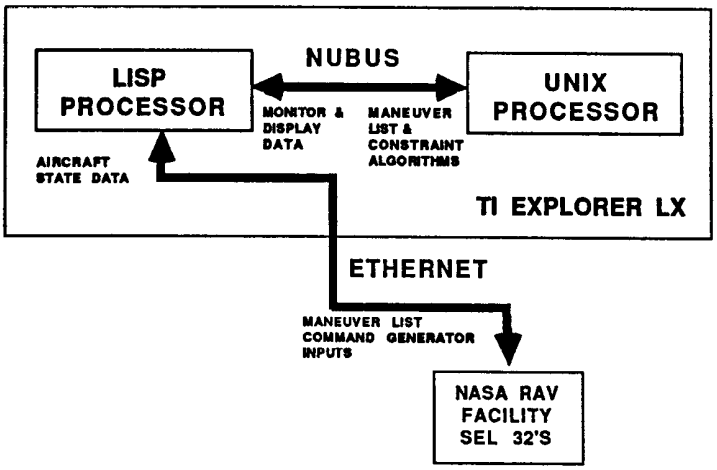

Figure 22 Validation/Flight System Communication

Fig 22

5.4.1 ETHERNET Communication

The ETHERNET/IEEE 802.2 Net is shown in Figure 23. Communication from the TI EXP-LX LISP processor to the MASSCOMP 5400 over ETHERNET consists of a list of maneuvers containing the information shown in Table 1 previously for each maneuver. 16 bit floating point numbers are passed. Communication from the MASSCOMP 5400 over ETHERNET to the TI EXP-LX consists of a data package containing X sets each of 13 floating point numbers every 4 seconds. These numbers represent aircraft state variables output from the simulation. This communication is utilized in the FTE Workstation configuration only. This data stream definition is shown graphically in Figure 6.

Communication from the TI EXP-LX LISP processor to the NASA SIM (SEL 32/27) over ETHERNET consists of the same list of maneuvers and information shown in Table 1. The communication interfaces were specifically engineered to minimize differences between communicating between the TX EXP-LX and the MASSCOMP 5400, and communicating between the TI EXP-LX and the NASA SIM. Communication from the NASA SIM to the TI EXP-LX consists of the same data package as described in the previous paragraph with the exception that the package is sent every 2 seconds as opposed to every 4 seconds.

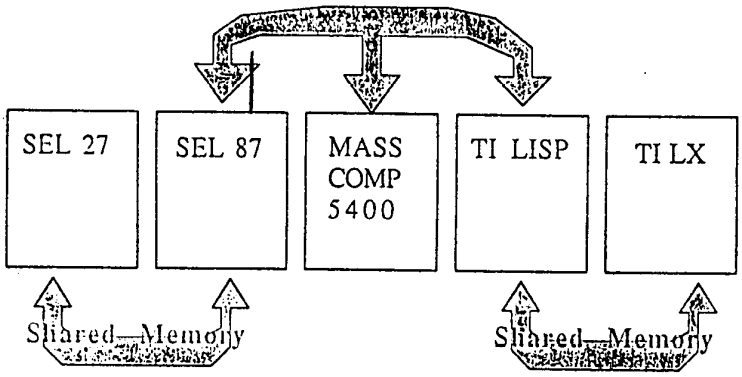

Figure 23 ATMS Communication Architecture

ETHERNET communication is in initiated by the FTE when he selects GENERATE 6 DOF TRAJECTORY on the MASTER menu of the MMI. Once the planned maneuver list has been transmitted to either the MASSCOMP 5400 or the NASA SIM (this selection was made by the FTE on system startup), the MMI shifts to the MONITOR mode and performs the expert system functions described in section 4.6 using the returning state and trajectory data received from either the MASSCOMP 5400 or the NASA SIM.

5.4.2 Shared Memory Communication

The TI EXP-LX LISP processor communicates with the TI EXP-LX UNIX processor via an internal NuBus using shared memory. Shared memory is one of several communication protocols supported by Texas Instruments on this machine. Shared memory is also the communication protocol between the SEL 32/87 and the SEL 32/27 in the NASA SIM.

All ATMS communication is initiated and controlled within rules in the MMI executing in the TI EXP-LX LISP processor. Selecting the GENERATE 3 DOF TRAJECTORY menu item on the MASTER menu causes a rule to fire which causes the parameters for the first maneuver on the planned maneuver list with transitions to be placed in shared memory initiating the DPS 3 DOF simulation on the UNIX processor. The information placed in shared memory includes all 86 items appearing on page 34 of Reference 18. At this point the MMI is "hung up" in a single rule until DPS completes the simulation of that maneuver and places the trajectory data into shared memory. The MMI reads the data and plots a spline representing the trajectory for that maneuver. The returned data includes 6 floating point numbers representing Mach, altitude, heading, fuel, time and arc distance traversed at every integration interval. The process is repeated for every maneuver in turn on the planned maneuvers with transitions list.

6.0 Use of the ATMS in the Development of the Rapid-Prototyping Facility

The rapid-prototyping facility for flight research in AI-based flight systems concept is a multiple-computer, distributed-processing system that includes a specially modified flight research aircraft. This facility is designed to provide a flexible testbed for a variety of experiments. The basis of this facility is the use of Ethernet with a standard protocol (TCP/IP) as the facility interface.

Structuring the configurations of the ATMS to use identical subsystems and interfaces was motivated by three goals:

1. minimizing development cost and schedule,
2. supporting the incremental build-up of facility capabilities; and,
3. aiding the verification and validation process.

The ATMS has been used to develop this facility in several ways. First, the ATMS bring together a variety of computers using the Ethernet interface. Second, by having incrementally more complex configurations, the ATMS provides a means of an organized and manageable build-up of capabilities and facility complexity. The final contribution of the ATMS in the development of this facility is in the validation, through flight research, of the capabilities of the facility.

7.0 Capabilities and Limitations of the ATMS Prototype System Developed in Phase I

7.1 System Capabilities

The ATMS Phase I system has the following capabilities:

1. The system accepts an unlimited number of flight test maneuvers with their associated flight conditions and orders them in accordance with a set of planning rules. The planning logic chooses higher speed maneuvers first, then higher altitude maneuvers first, then higher priority maneuvers first. The logic is preliminary and the subject of significant expansion/modification in follow-on phases of development. Four types of flight test maneuvers are selectable. Up to ten maneuvers have been successfully planned. There is no limit on the number of

maneuvers that can be planned other than the excessive CPU time required to find a solution.

2. The system has successfully controlled a 6 DOF F-15 simulation and a 3 DOF simulation (DPS) to automatically "fly" through a planned maneuver list. The flight test trajectory generated can be displayed on a map.

3. The system monitors data generated from a 6 DOF simulation and displays messages whenever prescribed maneuver tolerances are exceeded or whenever an R-2515 boundary is violated.

4. The system allows the FTE considerable interaction with ATMS functions and intimate control of flight test conditions through an extensive and well developed man-machine interface.

5. The integration of a TI EXP-LX, a MASSCOMP 5400 and the NASA SIM has been demonstrated. The system operates with symbolic and conventional general purpose processors to control a 6 DOF F-15 simulation in real time (when operating with the NASA SIM) and a 3 DOF F-15 simulation faster than real time.

6. The system operates with a rule based man-machine interface and graphics package.

7.2 System Limitations

The ATMS Phase I system has the following limitations:

1. The rule based man-machine interface operates much too slowly. Map scrolling and panning is slow. Graphic objects (particularly splines) take too long to draw. Communication interface software is too slow on the LISP side.

2. The ETHERNET TCP/IP protocol is too high level for efficient communication between computing machines. A customized communication link is required. The result is that communication is way too slow over ETHERNET. Combined with the problem described in 1 above, the result is that the communication interval could not bet set to less than 2 seconds, and while the MMI was actually drawing a trajectory, up to 20 seconds of data were lost on occasion.

3. Rules execute (are fired) way too slowly in ART to support real-time operation as a result of overhead associated with searches through excessively large knowledge bases and garbage collection. The large knowledge base is a direct result of using the ART SCHEMA system of fact-object association. The SCHEMA system is extremely useful in code development, but is a terrible burden in code execution due to the vast number of root SCHEMA which must be carried along. Garbage collection requirements are high because insufficient thought was given to garbage generation in either the development of the ART constructs or in the development of the ATMS MMI code.

8.0 Results and Conclusions Concerning the Phase I Effort

This paper describes the automated flight test management system (ATMS) and its use in the development of a rapid-prototyping flight research facility for AI-based flight systems concepts. This flight research facility is being developed at the Dryden Flight Research Facility of the NASA Ames Research Center to provide early flight assessment of emerging artificial intelligence technology.

The rapid-prototyping facility for flight research in AI-based flight systems concepts is a multiple-computer, distributed-processing system that includes a specially modified flight research aircraft. This facility is designed to provide a flexible testbed for a variety of experiments. The basis of this facility is the use of Ethernet with a standard protocol as the facility interface.

The ATMS has been used to develop this facility in several ways. First, the ATMS brings together a variety of computers using the Ethernet interface. Second, by having incrementally more complex configurations, the ATMS provides a means of an organized and manageable build-up of capabilities and facility complexity. The final contribution of the ATMS in the development of this facility is in the validation, through flight research, of the capabilities of the facility.

The ATMS system operates too slowly to be used effectively as a planning tool, as a real time monitor of flight tests or as a replanner during a flight test. Fixes in both hardware and software are being evaluated in Phase II of the ATMS development. These include:

1. Switching to the SUN workstation as a substitute for the TI EXP-LX.

2. Switching to CLIPS or Gensym G-2 as the expert system development environment.

3. Coding the MMI in procedural code in C as opposed to symbolic code.

9.0 Recommendations for Further Research & Development

9.1 Recommendations for Further Research

Follow-on research is highly recommended in several areas as follows:

1) investigate means of increasing the speed of communications between the ATMS host processor and the NASA simulation facility by a factor of 1000;

2) investigate means to increase the speed of rule firings in the ATMS monitor and replanner by a factor of 100;

3) investigate the use of alternate computer hardware and software both as a development environment for ATMS and as a run-time environment;

4) improve the performance of the ATMS user interface by employing a conventionally coded interface as opposed to a rule-based interface; and,

5) investigate the applications of ATMS to the flight testing of hypersonic vehicles including the National Aerospace Plane (NASP).

9.2 Recommendations for Further Development

Follow-on development is highly recommended to:

1) Complete the development of and deploy a prototype flight test engineer's workstation as an assistant in flight planning for all flight test programs conducted at NASA Dryden.

2) Demonstrate ATMS technology in a limited flight test to be conducted within fiscal 1989 using a NASA F-18 flight test airplane.

10.0 References

1. Eugene L. Duke, Michael R. Swann, Einar K. Enevoldson, and Thomas D. Wolf. "Experience with Flight Test Trajectory Guidance." Journal of Guidance, Control and Dynamics, Vol. 6, No. 5, 1983, pp 393-398.

2. Eugene L. Duke, Frank P. Jones, and Ralph B. Roncoli. "Development and Flight Test of an Experimental Maneuver Autopilot for a Highly Maneuverable Aircraft." NASA TP 2618, September 1986.

3. Eugene L. Duke. Victoria A. Regenie, and Dwain A. Deets. "Rapid-Prototyping Facility for Flight Research in Artificial-Intelligence-Based Flight Systems Concepts." NASA TM-88268, October 1986.

4. Martha B. Evans and Lawrence J. Schilling. "The Role of Simulation in the Development and Flight Test of the HiMAT Vehicle." NASA TM-84912, 1984.

5. John W. Edwards and Dwain A. Deets. "Development of a Remote Digital Augmentation System and Application to a Remotely Piloted Research Vehicle." NASA TN D-7941, 1975.

6. Gary Hartman, Gunter Stein, and Kevin Petersen. "Flight Data Processing with the F-8 Adaptive Algorithm." AIAA-77-1042, 1977.

7. Richard R. Larson, Rogers E. Smith, and Keith D. Krambeer. "Flight-Test Results Using Nonlinear Control with the 8C Digital Fly-by-Wire Aircraft." AIAA-83-2174, 1983.

8. P.K.A. Menon and R.A. Walker. "Aircraft Flight Test Trajectory Control," ISI Report No. 56, Integrated Systems, Inc., Santa Clara, CA, October 1985.

9. P.K.A. Menon, M.E. Badgett, and R.A. Walker. "Nonlinear Maneuver Autopilot for the F-15 Aircraft." ISI Report No. 71, Integrated Systems, Inc., Santa Clara, CA, December 1985.

10. Albert F. Myers and Spencer G. Sheets. "Qualification of HiMAT Flight Systems." 7th Annual Technical Symposium, Association for Unmanned Vehicle Systems Proceedings, Dayton, OH, June 1980

11. Albert F. Myers, Michael R. Earls, and Larry A. Callizo. "HiMAT Onboard Flight Computer System Architecture and Qualification." Journal of Guidance, Control, and Dynamics, Vol. 6, No. 5, 1983. pp 231-238.

12. Kevin L. Petersen. "Flight Experience with a Remotely Augmented Vehicle Test Technique." AIAA-81-2417, 1981.

13. Robert D. Reed. "RPRVs - The First and Future Flights." Astronautics and Aeronautics, Vol. 12, April 1974, pp. 26-42

14. SPARTA, Inc. "Study of a National Remote Computational Flight Research Facility." Final Report NASA Contract Number NAS 2-12211, Volumes 1-5. SPARTA, Inc., Laguna Hills, CA, July 1987.

15. Kenneth J. Scalai, Phillip G. Felleman, Joseph Gera, and Richard D. Glover. "Design and Text Experience with a Triply Redundant Digital Fly-by-Wire Control System." AIAA-76-1911, 1976.

16. Kenneth J. Szalai, Calvin R. Jarvis, Gary E. Krier, Vincent A. Megna, Larry D. Brock, and Robert N. O'Donnell. "Digital Fly-by-Wire Flight Control Validation Experience." NASA TM-72860, 1978.

17. Robert Walker and Naren Gupta. "Flight Test Trajectory Control Analysis." NASA CR 170935, February 1983.

18. Paul C. Redin, "DPS Digital Performance Simulation. User's Guide to Interactive Version 4.2." July 29, 1987.

NASA
National Aeronautics and Space Administration

Report Documentation Page

1. Report No. NASA CR-186011	2. Government Accession No.	3. Recipient's Catalog No.
4. Title and Subtitle: Automated Flight Test Management System		5. Report Date: May 1991
		6. Performing Organization Code
7. Author(s): M.D. Hewett, D.M. Tartt, and A. Agarwal		8. Performing Organization Report No. H-1699
		10. Work Unit No. RTOP 505-66
9. Performing Organization Name and Address: SPARTA, Inc. 23041 Ave. de la Carlota, Suite 400 Laguna Hills, CA 92653		11. Contract or Grant No. NAS2-12670
		13. Type of Report and Period Covered: Contractor Report
12. Sponsoring Agency Name and Address: National Aeronautics and Space Administration Washington, DC 20546-3191		14. Sponsoring Agency Code

15. Supplementary Notes

This contractor report was published as a companion document to NASA CR-179449 and CR-179450. M.D. Hewett and D.M. Tartt are affiliated with SPARTA, Inc. and A. Agarwal is affiliated with Integrated Systems, Inc., Santa Clara, CA 95054. NASA Technical Monitor: Kevin L. Petersen, Dryden Flight Research Facility, Edwards, CA 93523-0273.

16. Abstract

This report describes the Phase I development of an automated flight test management system (ATMS) as a component of a rapid-prototyping flight research facility for AI-based flight systems concepts. The ATMS provides a flight test engineer (FTE) with a set of tools that assist in flight test planning, monitoring and simulation. This system is also capable of controlling an aircraft during flight test by performing closed-loop guidance functions, range management and maneuver-quality monitoring. The ATMS is being used as the prototypical system to develop a flight research facility for AI-based flight systems concepts at NASA Ames Dryden.

17. Key Words (Suggested by Author(s)): Flight test; Flight test monitoring; Hypersonic vehicles; Real-time computation		18. Distribution Statement: Unclassified — Unlimited Subject category 05	
19. Security Classif. (of this report): Unclassified	20. Security Classif. (of this page): Unclassified	21. No. of Pages: 40	22. Price: A03

NASA FORM 1626 OCT 86 *For sale by the National Technical Information Service, Springfield, Virginia 22161-2171*