CONFIDENTIAL

NACA RM H58B11

RESEARCH MEMORANDUM

CLASSIFICATION CANCELLED
BY AUTHORITY OF Res Abst 128
DATE 7-28-58

PRELIMINARY FLIGHT SURVEY OF FUSELAGE AND BOUNDARY-LAYER SOUND-PRESSURE LEVELS

By Norman J. McLeod and Gareth H. Jordan

High-Speed Flight Station
Edwards, Calif.

NACA LIBRARY
LANGLEY AERONAUTICAL LABORATORY
LANGLEY FIELD, VA.

CLASSIFIED DOCUMENT

This material contains information affecting the National Defense of the United States within the meaning of the espionage laws, Title 18, U.S.C., Secs. 793 and 794, the transmission or revelation of which in any manner to an unauthorized person is prohibited by law.

NATIONAL ADVISORY COMMITTEE
FOR AERONAUTICS
WASHINGTON
May 13, 1958

CONFIDENTIAL

15593

UNCLASSIFIED

NATIONAL ADVISORY COMMITTEE FOR AERONAUTICS

RESEARCH MEMORANDUM

PRELIMINARY FLIGHT SURVEY OF FUSELAGE AND BOUNDARY-LAYER SOUND-PRESSURE LEVELS

By Norman J. McLeod and Gareth H. Jordan

SUMMARY

Preliminary flight surveys of noise inside fuselages and in the fuselage boundary layer have been obtained to determine the magnitude of the noise and the relative importance of engine noise and the noise due to the boundary layer. Internal measurements were made at subsonic and low supersonic speeds and boundary-layer measurements at subsonic speeds.

The results of this investigation show the sound-pressure level continued to increase with airspeed to the highest airspeed obtained, although the rate of increase at supersonic speeds was less than at subsonic speeds. Sound-pressure level inside the fuselage was largely determined by engine noise at low airspeeds and by boundary-layer noise at high airspeeds. Octave-band-frequency analysis of the sound-pressure levels in the higher frequency octave bands showed a larger increase with increase in airspeed than in the lower frequency octave bands.

INTRODUCTION

The advent of high-speed flight and the use of large jet engines has focused attention on noise in the design of aircraft. Engine noise has increased with the increase in engine power, and the aerodynamic or boundary-layer noise has increased with the increase in flight speeds. Many contemporary aircraft have uncomfortably high noise levels, and some aircraft have experienced localized structural failure because of intense noise fields. Nonconservative design specifications can result in costly modifications after the aircraft is completed, and overconservative design specifications result in performance penalties. The limited amount of data available on the noise environment of an aircraft in flight makes it impossible to formulate proper design specifications based on the noise environment to be experienced by the aircraft.

This paper presents some preliminary flight surveys of the effects of boundary-layer and engine noise on the noise inside fuselages at subsonic and supersonic speeds and in the fuselage boundary layer at subsonic speeds. The data are the preliminary results of an investigation of boundary-layer noise and the noise environment of aircraft being conducted by the NACA High-Speed Flight Station at Edwards, Calif.

DESCRIPTION OF AIRPLANES

Photographs and three-view drawings of the Boeing B-47A airplane and the Douglas D-558-II research airplane used in this investigation are shown in figures 1 and 2, respectively. The stations at which the sound levels of the fuselage were measured are indicated in the drawings.

The B-47A is a swept-wing bomber airplane, similar in configuration to proposed commercial jet transports, and is powered by six General Electric J47-23 jet engines each rated at approximately 5,000 pounds sea-level static thrust. Fuselage stations 445 and 680 are in the bomb bay, and station 1040 is in the heater compartment under the dorsal fin.

The D-558-II is a swept-wing rocket-powered aircraft capable of flight at supersonic speed and is similar in configuration to many current fighter-type airplanes. It is powered by a Reaction Motors LR8-RM-6 rocket motor rated at 6,000 pounds sea-level static thrust. Fuselage station 445 is in the rear fuselage compartment, which also contains the rocket motor.

INSTRUMENTATION

Western Electric 640-AA condenser microphones and a General Radio Co. sound-level meter, type 1551-A, were used to obtain the noise surveys reported in this paper. A Western Electric RA-1095 amplifier and battery power supply were used for all internal sound measurements. A Western Electric 640-AA condenser microphone, equipped with a scintered wind screen, and a Western Electro-acoustic Laboratory-type 100E power supply and amplifier were used to obtain the noise levels in the boundary layer. An octave-band filter composed of Burnell E. Co. filters S-3043 to S-3052 was used to obtain an octave-band-frequency analysis of the B-47A airplane sound-pressure levels.

The internal microphone was mounted facing forward and in the approximate center of the fuselage of the B-47A and D-558-II airplanes at each of the fuselage stations shown in figure 2. The microphone and amplifier were suspended in the fuselage with bungee cord as shown in figure 3. It is

believed that this mounting effectively isolated the microphone and amplifier from any structural vibration effects.

The boundary-layer microphone was mounted at station 680 on the left side of the fuselage of the B-47A airplane. The microphone was mounted flush with the exterior surface of the fuselage skin, and was approximately 8 feet to the rear and 16 feet to the side of the center of the inboard jet engine exhaust nozzle. Figure 4 shows the mount and diaphragm used to minimize vibration effects and insure continuity of the surface of the fuselage skin.

Standard NACA film recording instruments were used to record airspeed, altitude, normal acceleration, and angle of attack and sideslip. A standard NACA recording manometer and total-head survey rake were used to measure the boundary-layer thickness of the B-47A airplane approximately 6 inches rearward of the location of the boundary-layer microphone at station 680. The sound-pressure-level data for the B-47A were visually observed and recorded by the copilot. A time history of the overall sound level in the D-558-II airplane was obtained by photographing the sound-level meter while the pilot maintained an "on-scale" reading.

Figure 5 presents the calibration of the sound-pressure-level instrumentation as installed in the B-47A at station 680. This calibration was performed electrically to determine the response of the system without filter and through each of the octave-band filters. The calibration without filter corresponds to the response of the system to the overall sound-pressure level. The instrumentation was check-calibrated before and after each flight with 90- and 120-decibel calibrators at 400 and 1,000 cycles per second. The difference between preflight and postflight calibrations was never more than 1/2 decibel. The installation of a scintered wind screen on the boundary-layer microphone did not change the calibration of the microphone by more than 1/2 decibel through the frequency range presented. The external sound levels at station 680 were measured with the boundary-layer rake removed.

TESTS

B-47A Airplane

The data for sound levels of the B-47A were obtained on the ground during engine runs and in flight at altitudes of 10,000 and 20,000 feet. The flight data are for subsonic speeds from 175 to 400 knots, indicated airspeed. The data were visually observed and recorded by the copilot and were obtained during relatively smooth air conditions.

Two flight techniques were used to obtain the sound-level data for the B-47A. The first technique was to record the sound level during accelerating runs at approximately 100-percent engine rpm (7,800 rpm) and during decelerating runs at approximately 50-percent engine rpm. The visual recording technique allowed only the overall sound level or the

sound level in one octave band to be obtained during an accelerating and decelerating run. In order to reduce the amount of flying time, only selected octave-band sound levels were obtained in this manner.

The second technique consisted of establishing various stable flight conditions (constant indicated airspeeds and the corresponding engine rpm) and recording the overall sound-pressure level and the sound-pressure level in various octave bands by manually switching through the various filter elements.

The ground data for the B-47A were obtained prior to takeoff with the airplane in the clean configuration, except that the landing gear was extended and the landing-gear doors were open.

D-558-II Airplane

A time history of overall sound level in the D-558-II airplane was recorded on film during accelerating flight with power on and decelerating flight with power off. These data were obtained at an altitude of 47,000 feet, except for the portion of the power-on flight required to climb to test altitude. The data are for subsonic and supersonic speeds from 180 to 400 knots, indicated airspeed.

RESULTS AND DISCUSSION

B-47A Airplane Sound-Pressure Levels

Overall sound-pressure levels.- Figure 6 presents the variation of overall sound-pressure level with indicated airspeed at three internal stations and at one external station. Also shown in figure 6 are the effects of altitude and engine rpm on the measured sound-pressure levels.

The overall sound-pressure levels inside the fuselage show an increase with an increase in indicated airspeed. Also associated with the increase in indicated airspeed is a reduction in airplane angle of attack from about 8° to near 0°. This reduction in angle of attack reduced the cross-flow over the fuselage and resulted in a thickening of the boundary layer. Fuselage stations 445 and 680 have approximately the same sound-pressure level, since they are in the same compartment. Fuselage station 1040, however, indicates an overall sound-pressure level about 6 decibels higher than the two stations in the bomb bay.

The sound-pressure levels obtained during stable flight conditions (to be discussed later) at engine rpm appreciably greater than 50 percent were compared with these data and were never more than 1 decibel greater

than that shown for 50-percent engine rpm. The overall internal sound-pressure level shown for 50-percent engine rpm is therefore believed to be a good measure of the sound-pressure level inside the fuselage due to boundary-layer noise. At the lower indicated airspeeds, increasing engine rpm from 50 percent to 100 percent increased the overall sound-pressure level 10 to 16 decibels depending on the location within the fuselage. At the higher indicated airspeeds, however, engine rpm had a negligible effect on the sound-pressure level inside the fuselage, thus boundary-layer noise is the predominant source of noise inside the fuselage at the higher indicated airspeeds.

The external overall sound-pressure level measured at fuselage station 680 was found to be 20 to 25 decibels higher than the internal sound-pressure level measured at this station. The effects of engine noise on the external sound-pressure levels are evident at all indicated airspeeds for which measurements were made. It should be noted that this is a measurement at one location on the external surface of the fuselage and is not necessarily the maximum, nor is it representative of the sound-pressure levels existing at other points around the fuselage at this station. The boundary-layer thickness at this position was found to increase from about $1\frac{1}{2}$ inches at 175 knots, indicated airspeed, to about 5 inches at 375 knots, indicated airspeed.

Sound-pressure levels in several octave bands.- Figure 7 presents the variation of sound-pressure level in several octave bands with indicated airspeed for three internal and one external fuselage station. The trends previously noted in the overall sound-pressure data prevail in most of the octave bands. The exceptions to these trends are of interest because of the insight they provide into the relative importance of boundary-layer noise and engine noise at the various fuselage stations. These exceptions show that within the scope of these data internal sound-pressure level is determined by the boundary-layer noise below 75 cps for all indicated airspeeds and above 1,200 cps at the higher indicated airspeeds. Within the scope of these data the engine noise determines the internal sound-pressure level in the 300- to 600-cps band at all indicated airspeeds and at low airspeeds for all other octave bands except the 20- to 75-cps band.

The external sound-pressure levels at station 680 were 15 to 30 decibels higher than the internal sound-pressure levels at this station. There was negligible effect of engine noise in the 20- to 75-cps band on the external sound-pressure levels; however, the effect of engine noise is evident in the other octave bands for all indicated airspeeds.

Sound levels for stable flight conditions.- Figure 8 presents the overall sound-pressure level and the sound-pressure level in various

octave bands at three internal and one external fuselage stations for stable flight conditions. The data which give the complete octave-band spectra from 20 cps to 9,600 cps show the same general trends as previously noted and illustrate some interesting results. An increase in flight speed and engine rpm results in a larger increase in sound-pressure level in the higher frequency octave bands than in the lower frequency octave bands, with the exception of 4,800- to 9,600-cps octave band at station 680. The sound-pressure levels obtained at 100-percent engine rpm on the ground are shown for each station for comparison purposes. The sound-pressure levels measured in stable flight are less than those measured on the ground, except for the two highest octave bands at station 1040.

Internal Sound-Pressure Levels of the D-558-II Airplane

Overall internal sound-pressure levels.- Figure 9 presents the overall internal sound-pressure levels at fuselage station 445 of the D-558-II. At supersonic speeds the sound-pressure level with rockets off is approximately the same as with rockets on since the difference shown is within the accuracy of the data. The negligible power effects indicate that the boundary-layer noise is the dominant factor in determining the internal sound-pressure levels at high airspeeds. The internal sound-pressure level continues to increase to the highest indicated airspeeds shown; however, at supersonic speeds the rate of increase in decibels of the sound-pressure level due to boundary layer is less than at subsonic speeds. Although this is the same trend shown by the overall internal sound-pressure levels in the B-47A at subsonic speed, the actual sound-pressure levels in the two airplanes should not be compared directly because of the differences in the structure and differences in the test altitude.

CONCLUSIONS

Preliminary flight surveys of the sound-pressure levels inside fuselages at subsonic and low supersonic speeds and in the boundary layer at subsonic speed indicate the following:

1. Overall sound-pressure levels increased with increase in indicated airspeed. At low supersonic speed the rate of increase was somewhat reduced over that at subsonic speed.

2. Sound-pressure level inside the fuselage was determined at high airspeed by the boundary layer. At the lower airspeeds, increasing engine rpm from 50 percent to 100 percent increased the overall sound-pressure level from 10 to 16 decibels depending on the location within the fuselage.

3. The increase in internal sound-pressure level with increase in airspeed was generally greater in the higher frequency octave bands than in the lower frequency octave bands.

High-Speed Flight Station,
National Advisory Committee for Aeronautics,
Edwards, Calif., January 22, 1958.

(a) Boeing B-47A airplane. E-1049

Figure 1.- Photographs of the airplanes.

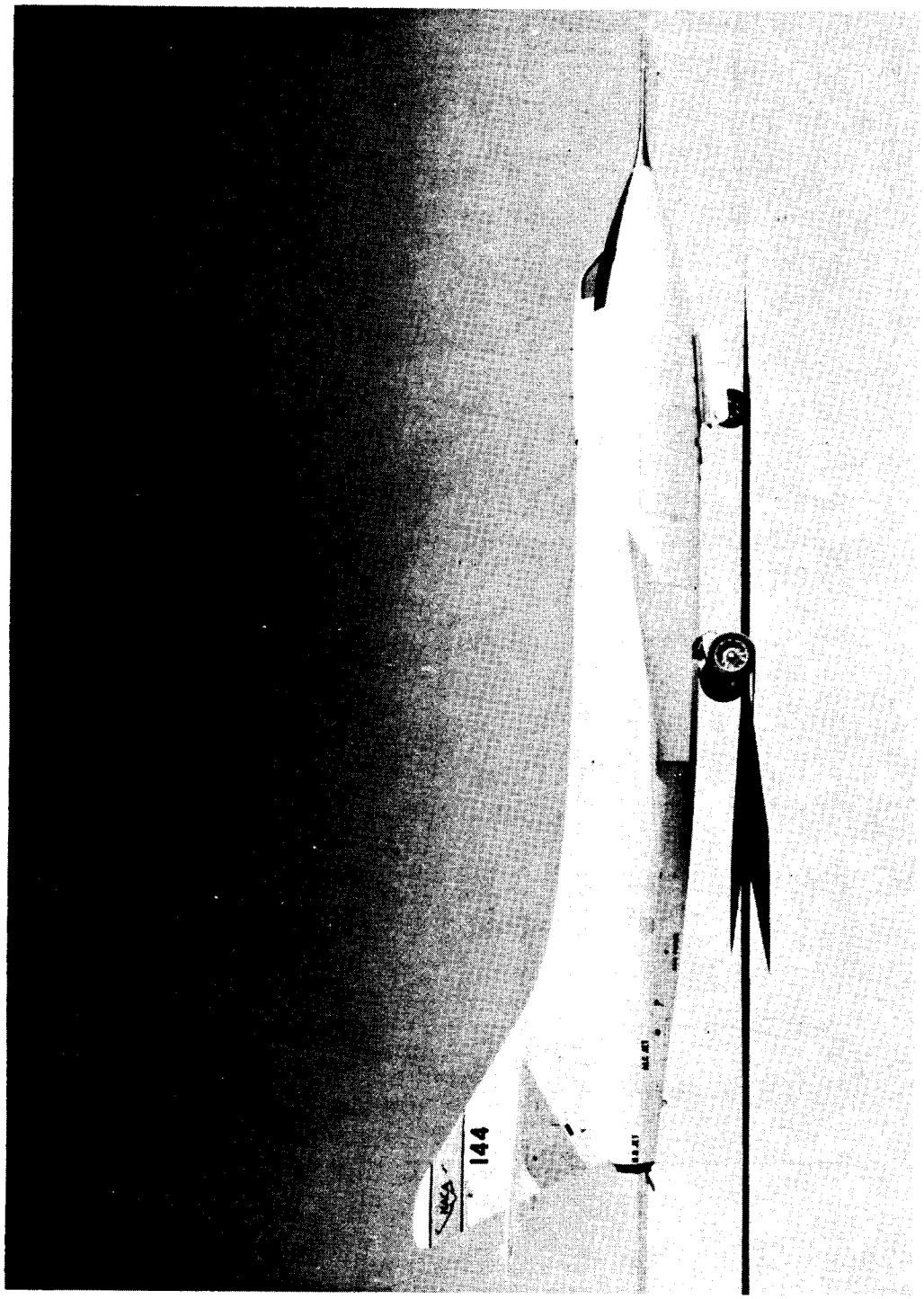

(b) Douglas D-558-II research airplane. E-1443

Figure 1.- Concluded.

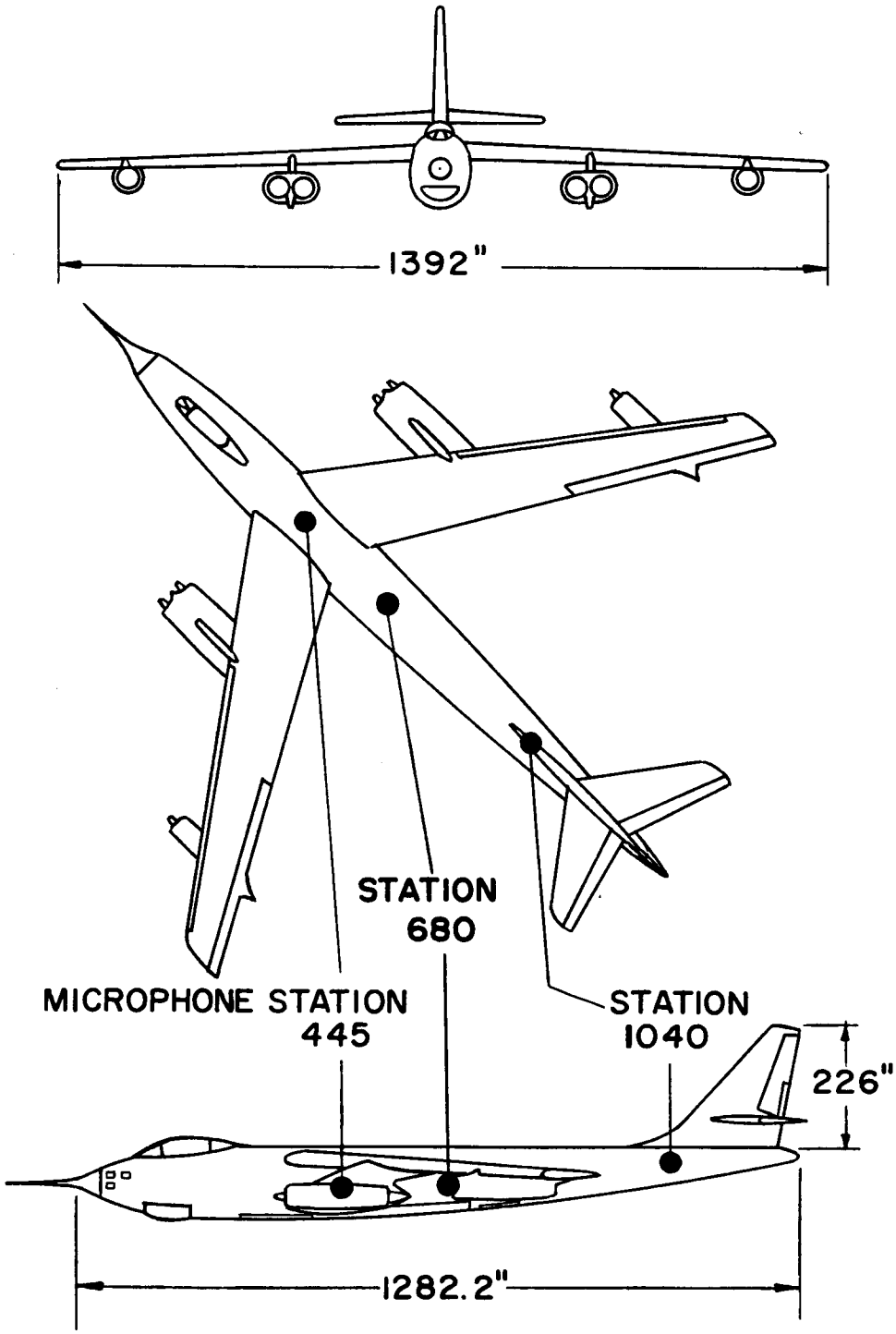

(a) B-47A airplane.

Figure 2.- Three-view drawings of the airplanes.

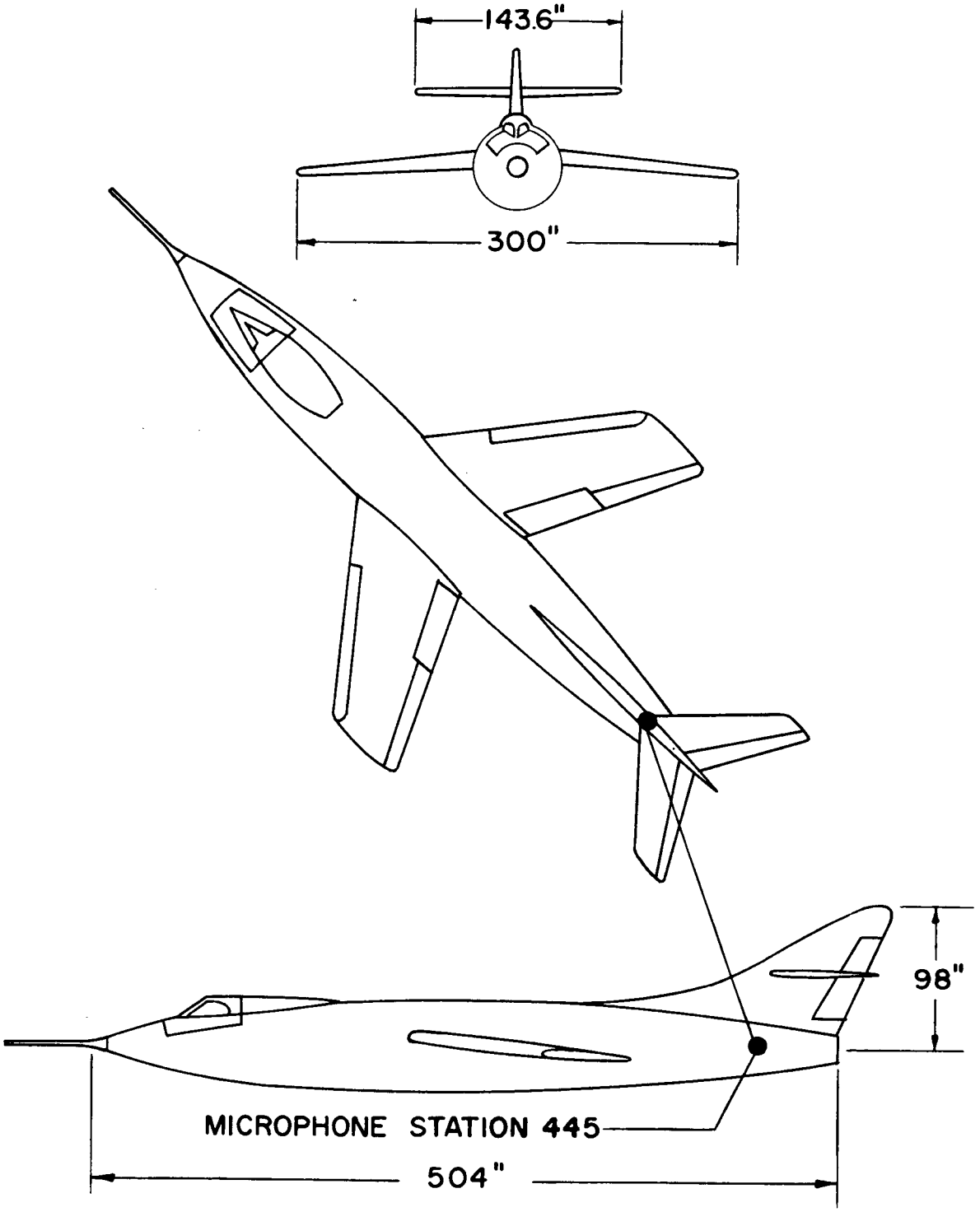

(b) D-558-II airplane.

Figure 2.- Concluded.

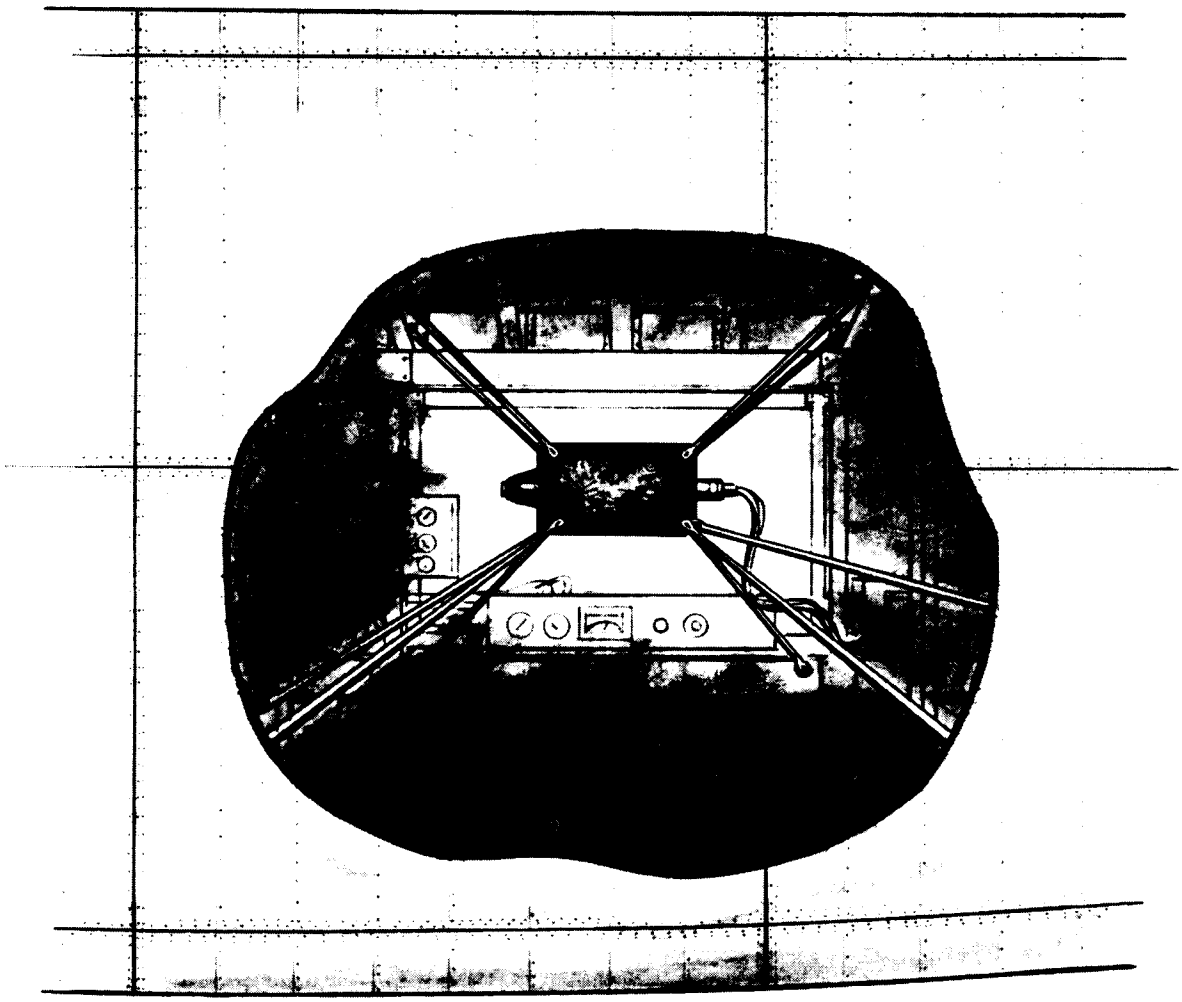

Figure 3.- Sketch of typical mounting of internal microphone.

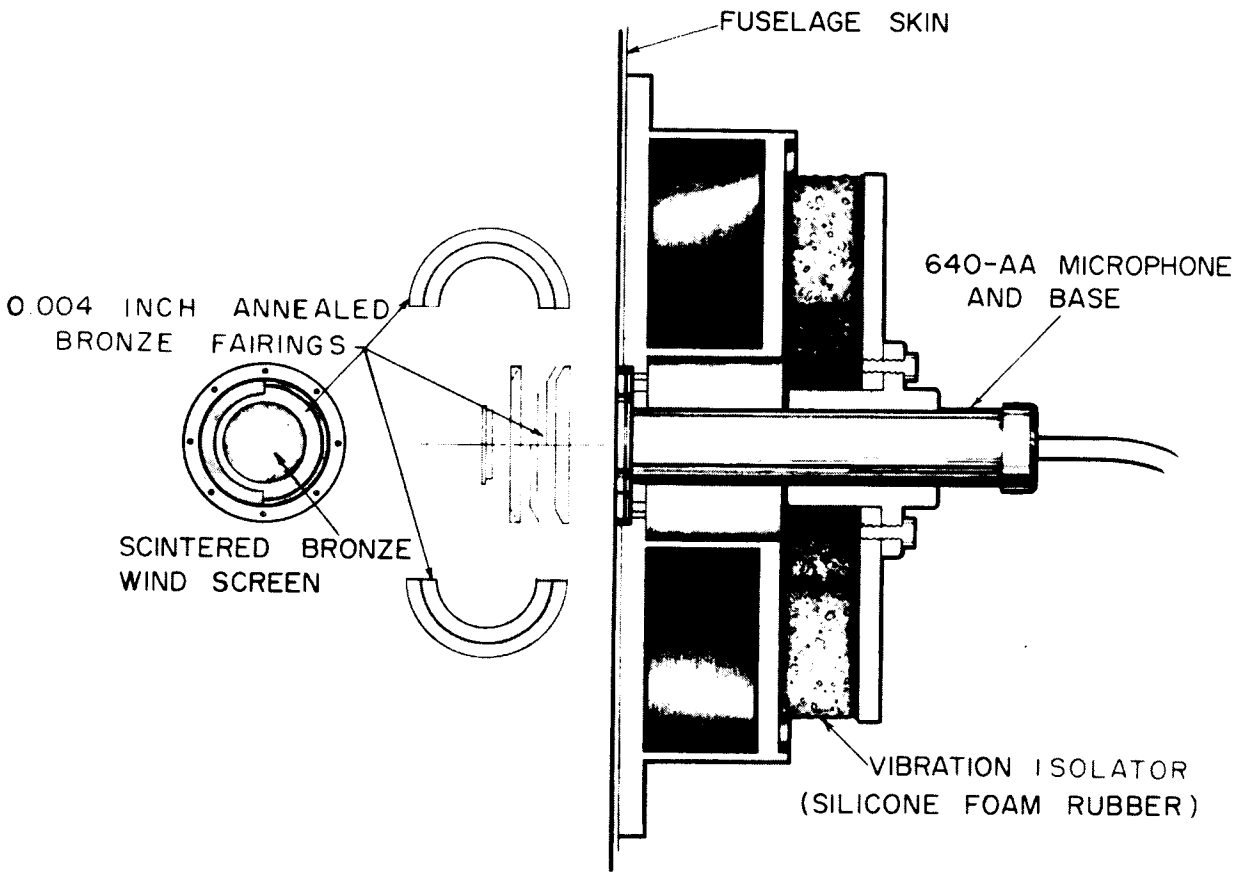

Figure 4.- Vibration isolating mount and fairing for boundary-layer microphone.

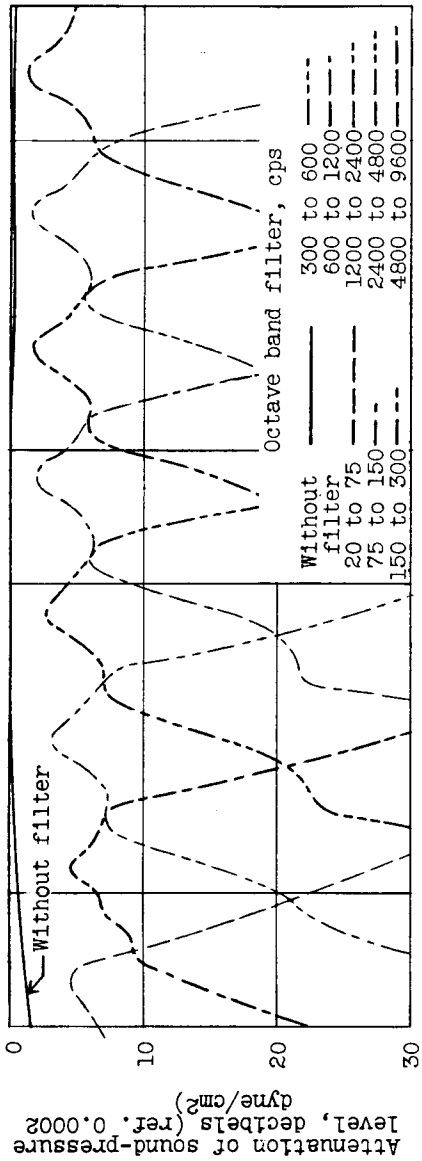

(a) Internal sound-measuring instrumentation.

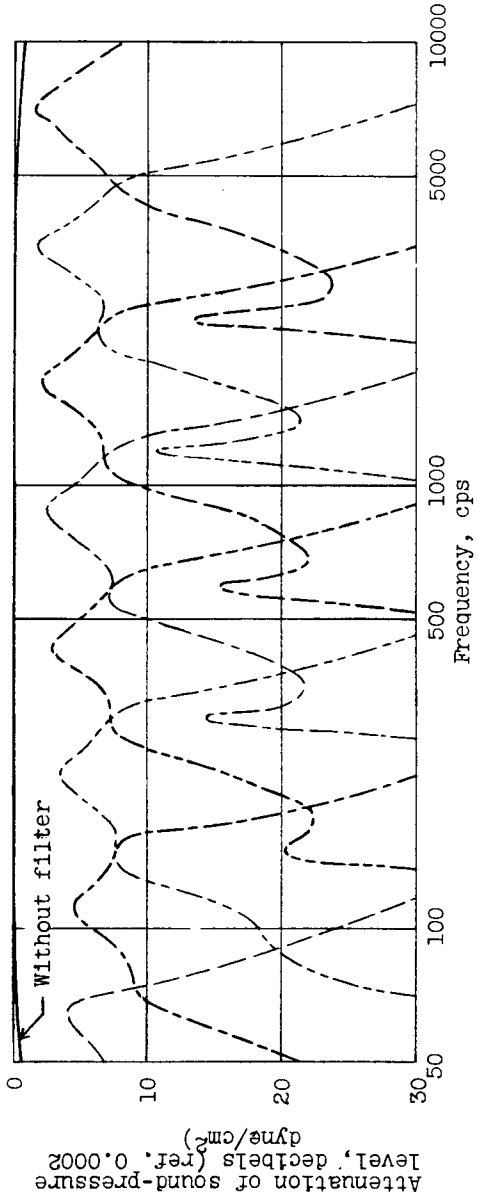

(b) External sound-measuring instrumentation.

Figure 5.- Calibration of sound-pressure-measuring instrumentation at station 680 in B-47A airplane.

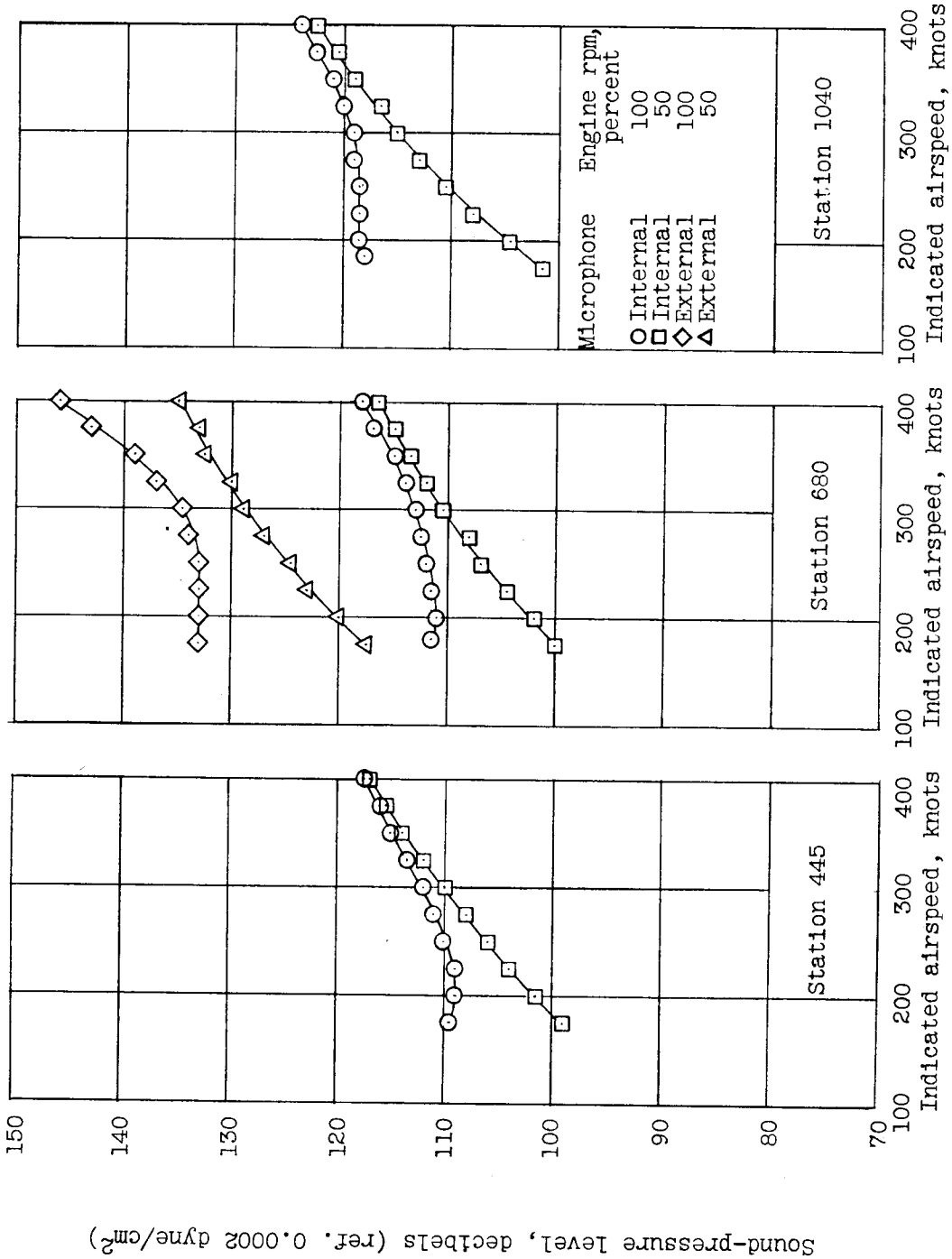

(a) Altitude ≈ 10,000 feet.

Figure 6.- Variation with airspeed of overall sound-pressure level at three fuselage stations of the B-47A airplane.

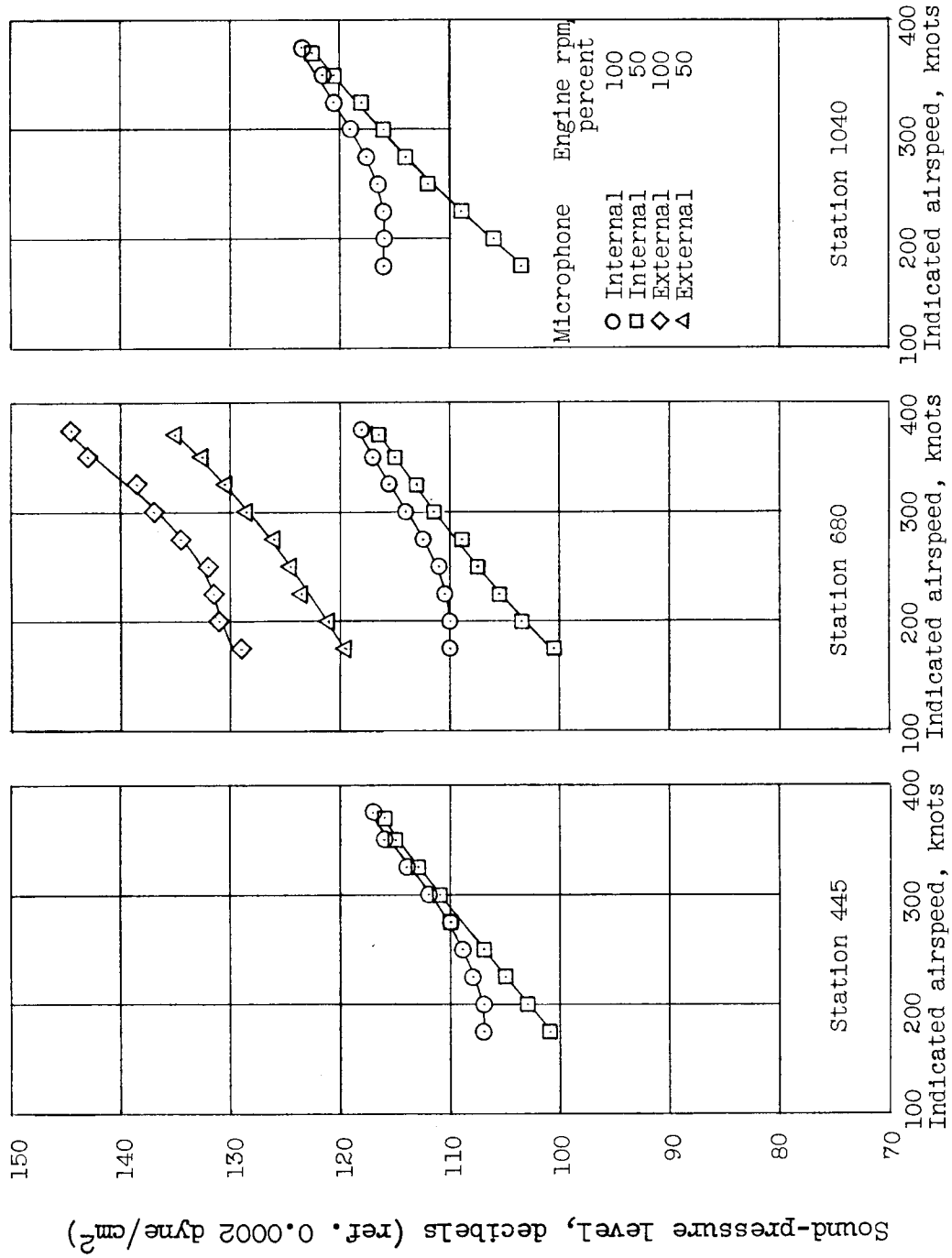

(b) Altitude ≈ 20,000 feet.

Figure 6.- Concluded.

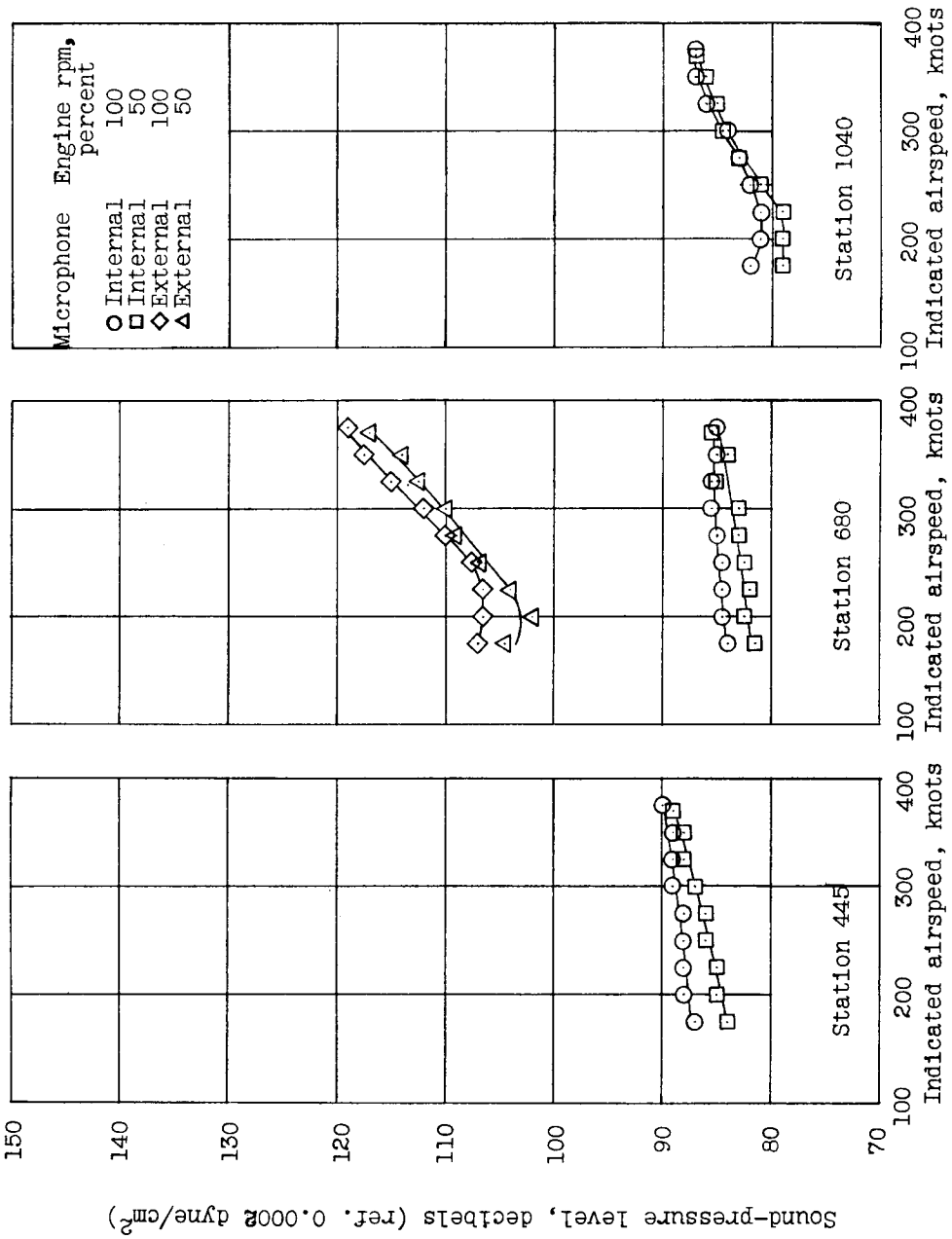

(a) 20 to 75 cps. Octave band.

Figure 7.- Variation with indicated airspeed of sound-pressure level in various octave bands at three fuselage stations of the B-47A airplane. Altitude ≈ 20,000 feet.

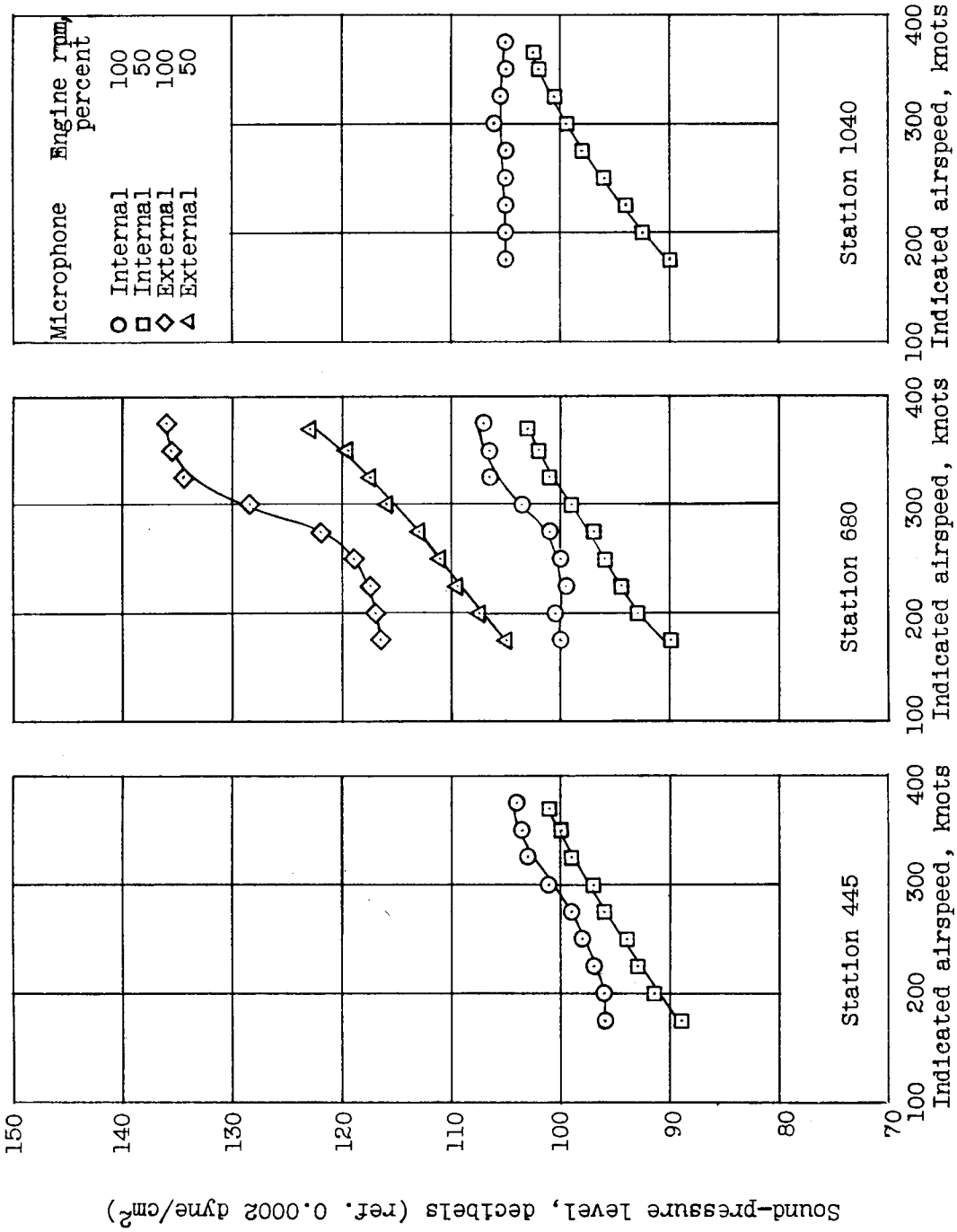

(b) 300 to 600 cps. Octave band.

Figure 7.- Continued.

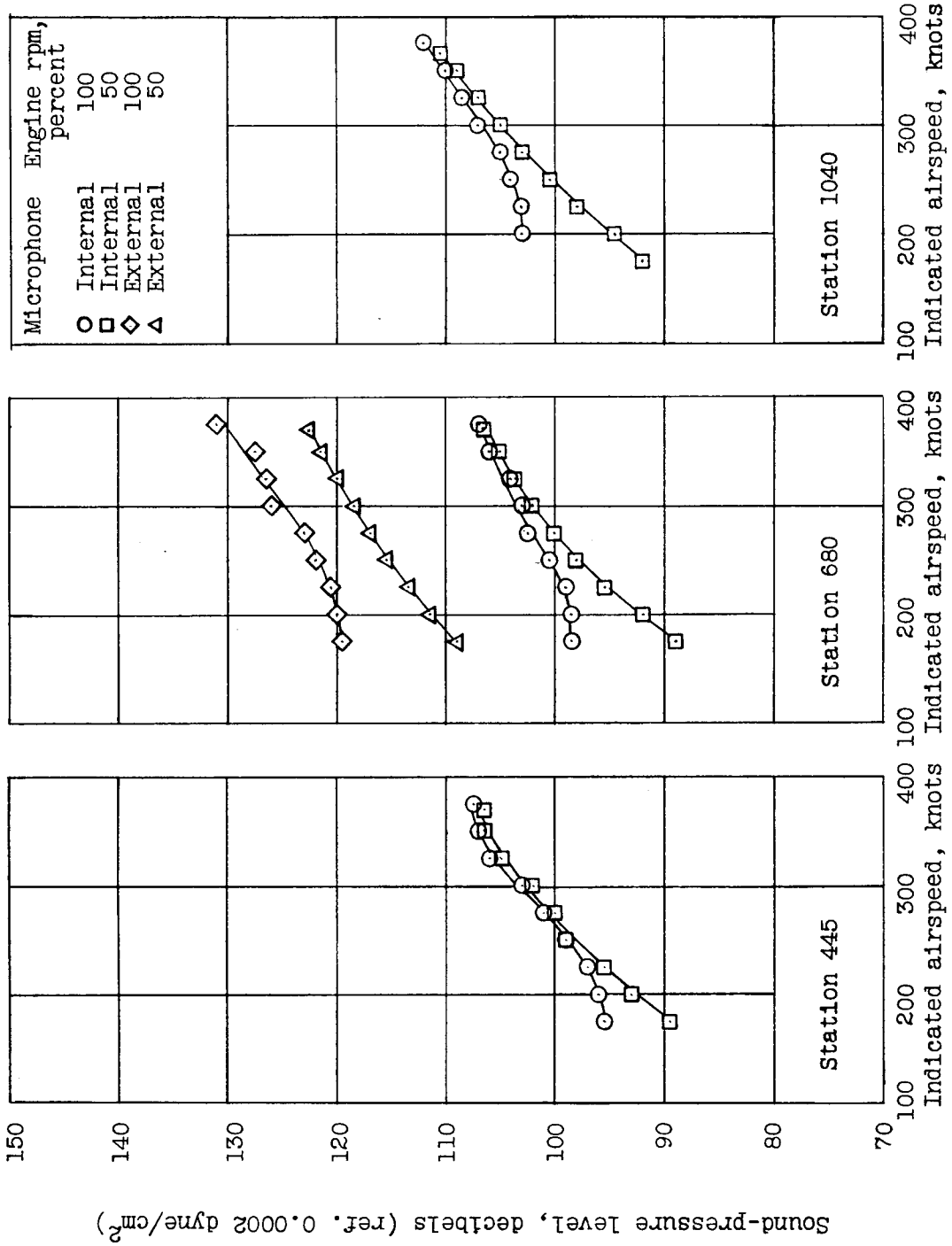

(c) 1,200 to 2,400 cps. Octave band.

Figure 7.- Continued.

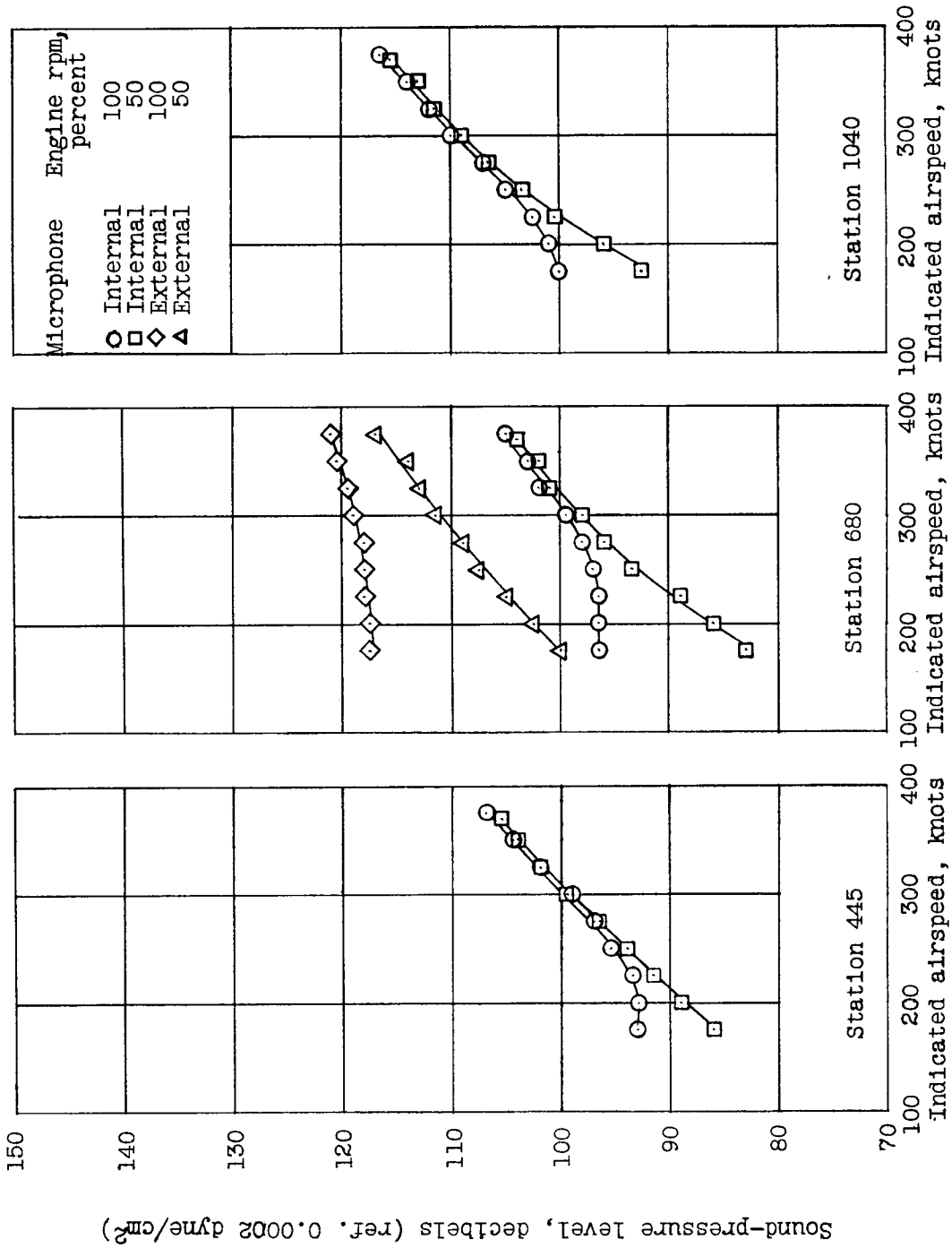

(d) 4,800 to 9,600 cps. Octave band.

Figure 7.- Concluded.

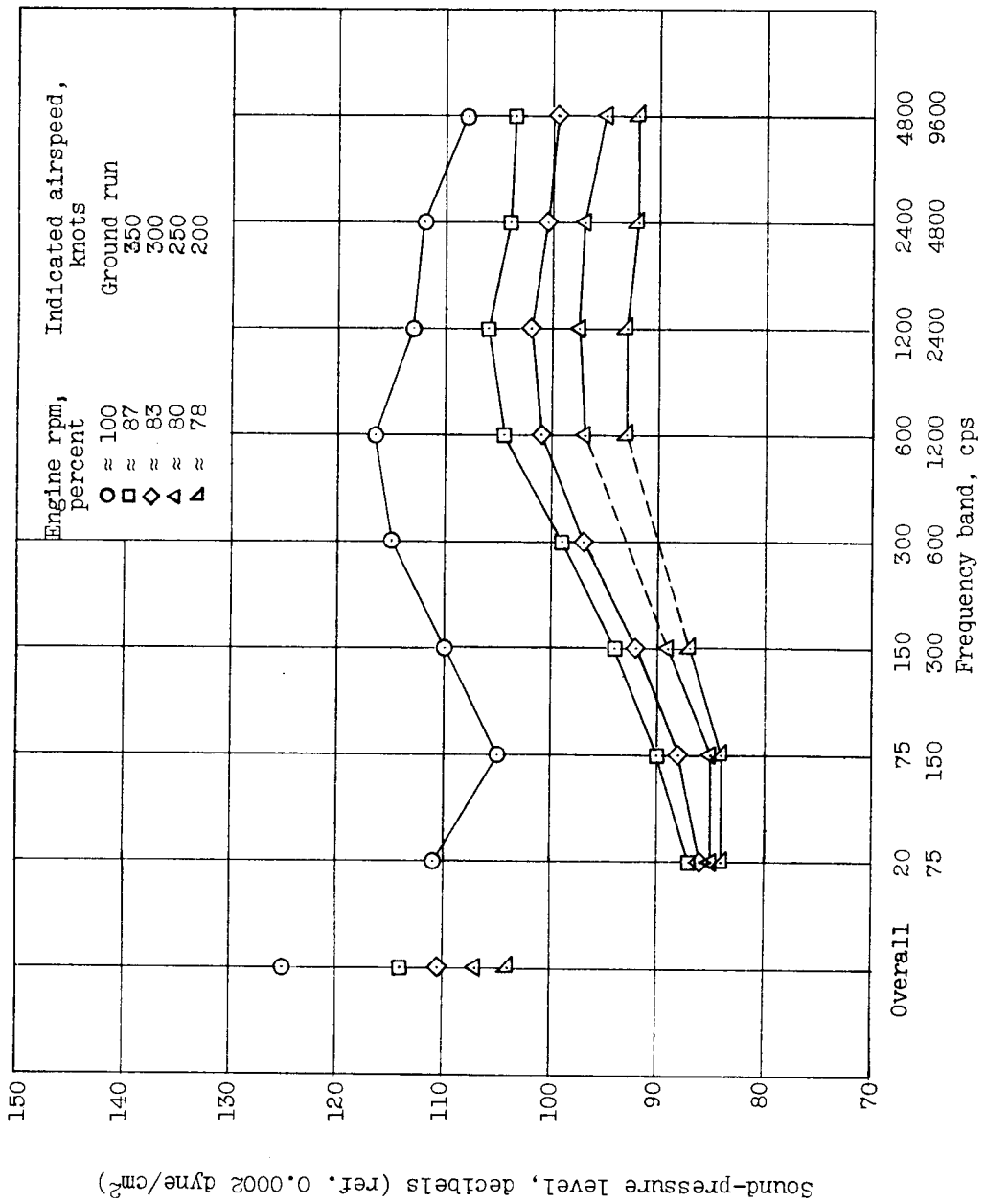

(a) Internal sound levels, fuselage station 445.

Figure 8.- Sound-pressure spectra at three fuselage stations of B-47A airplane at various indicated airspeeds. Altitude ≈ 20,000 feet.

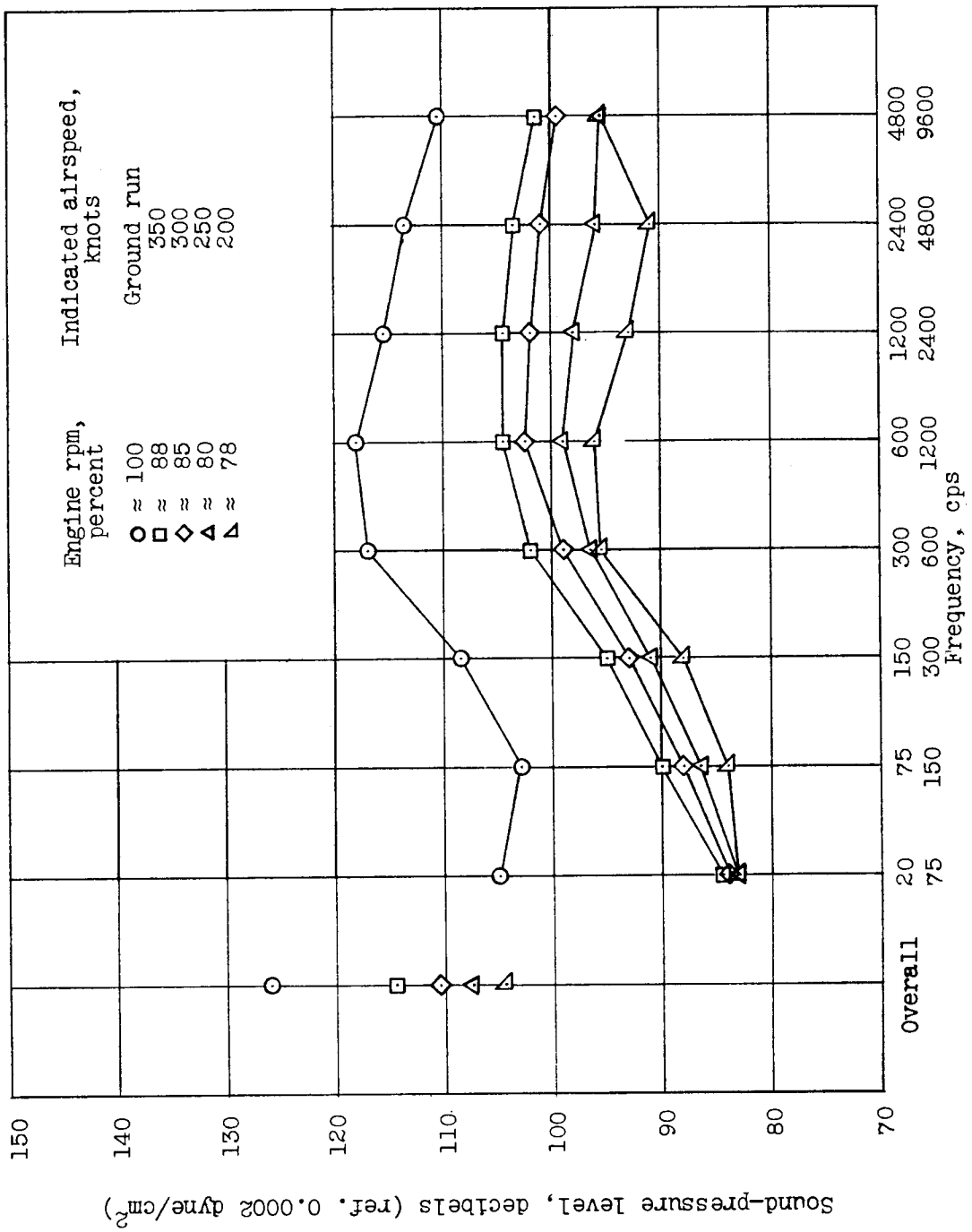

(b) Internal sound levels, fuselage station 680.

Figure 8.- Continued.

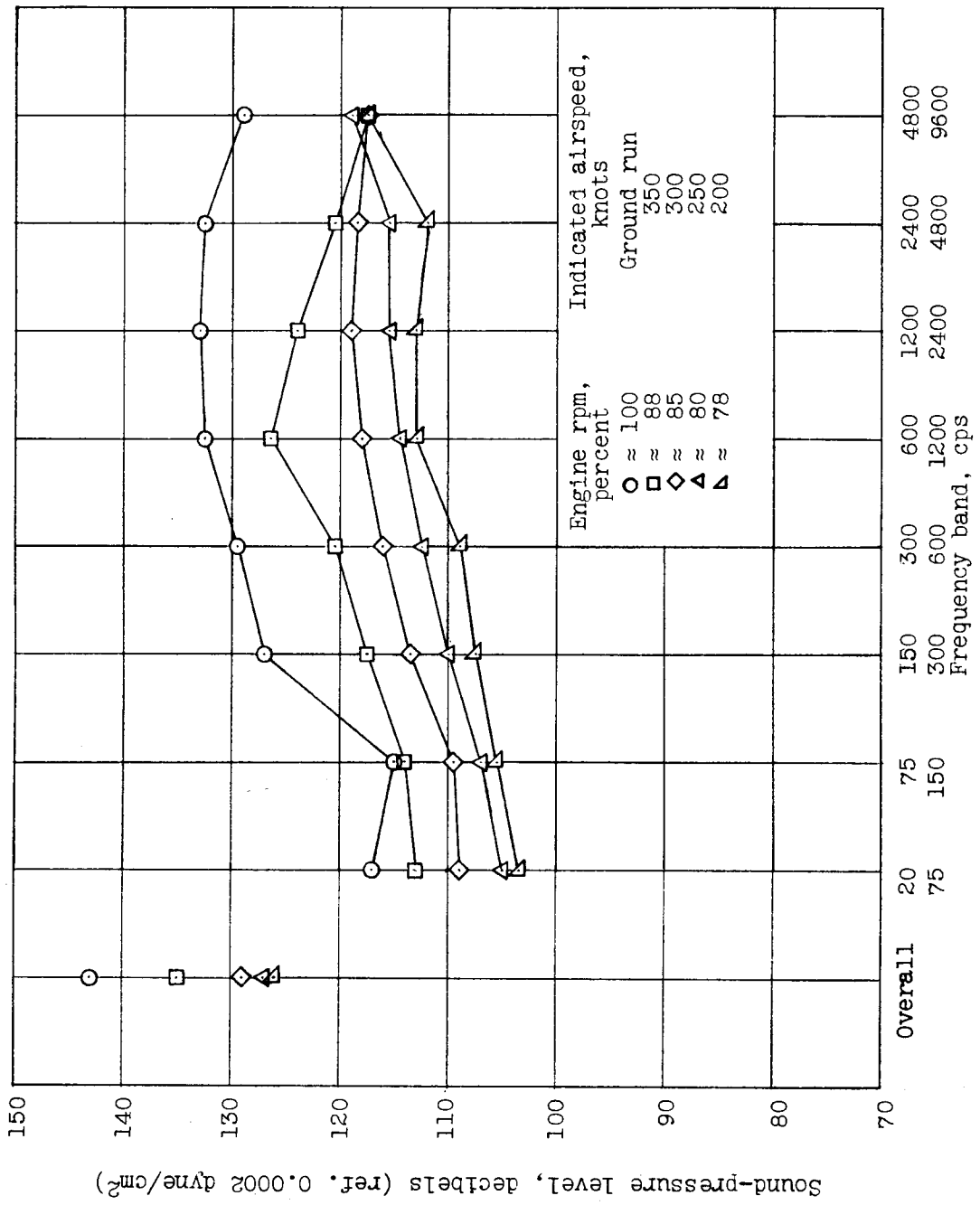

(c) External sound levels, fuselage station 680.

Figure 8.- Continued.

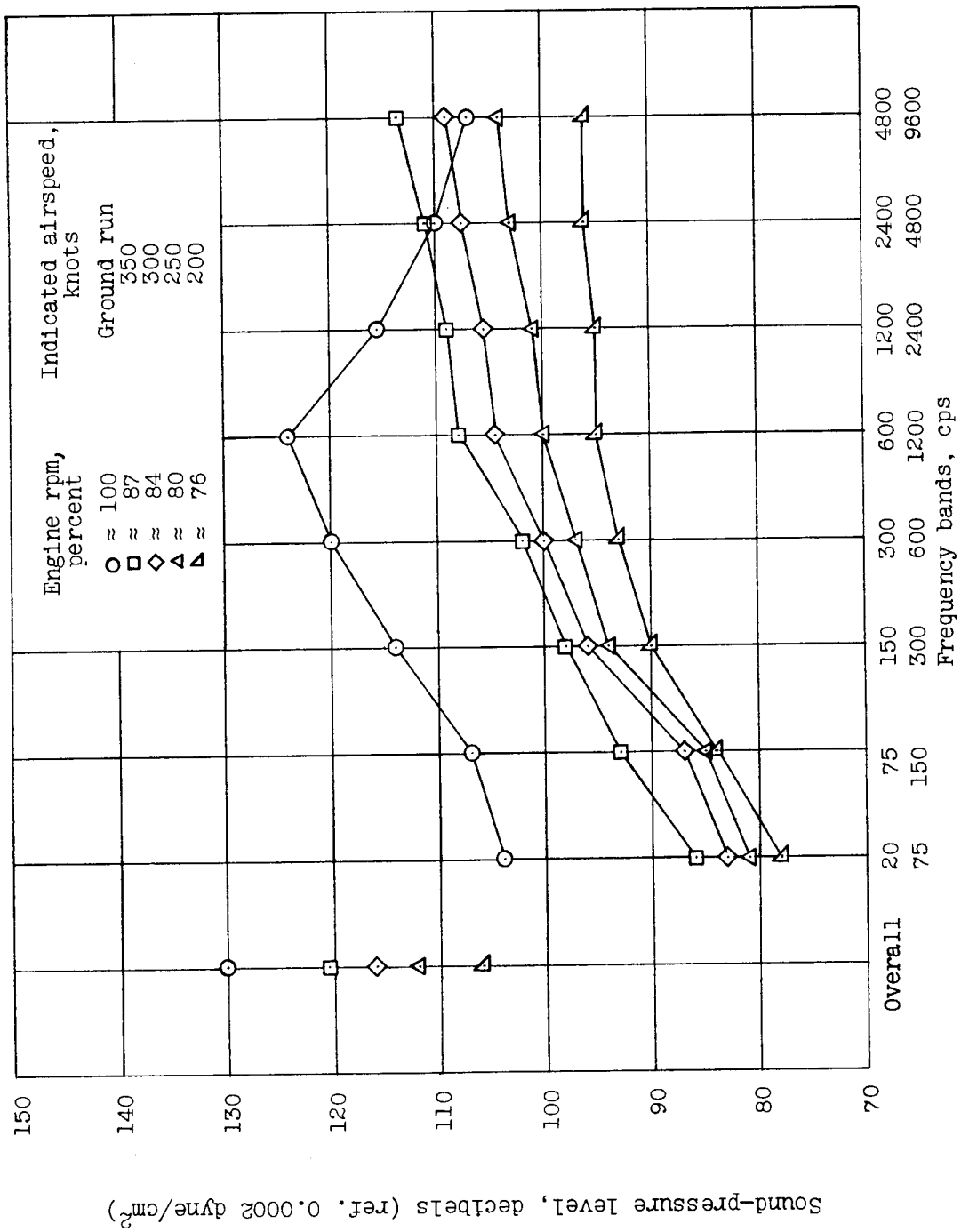

(d) Internal sound levels, fuselage station 1040.

Figure 8.- Concluded.

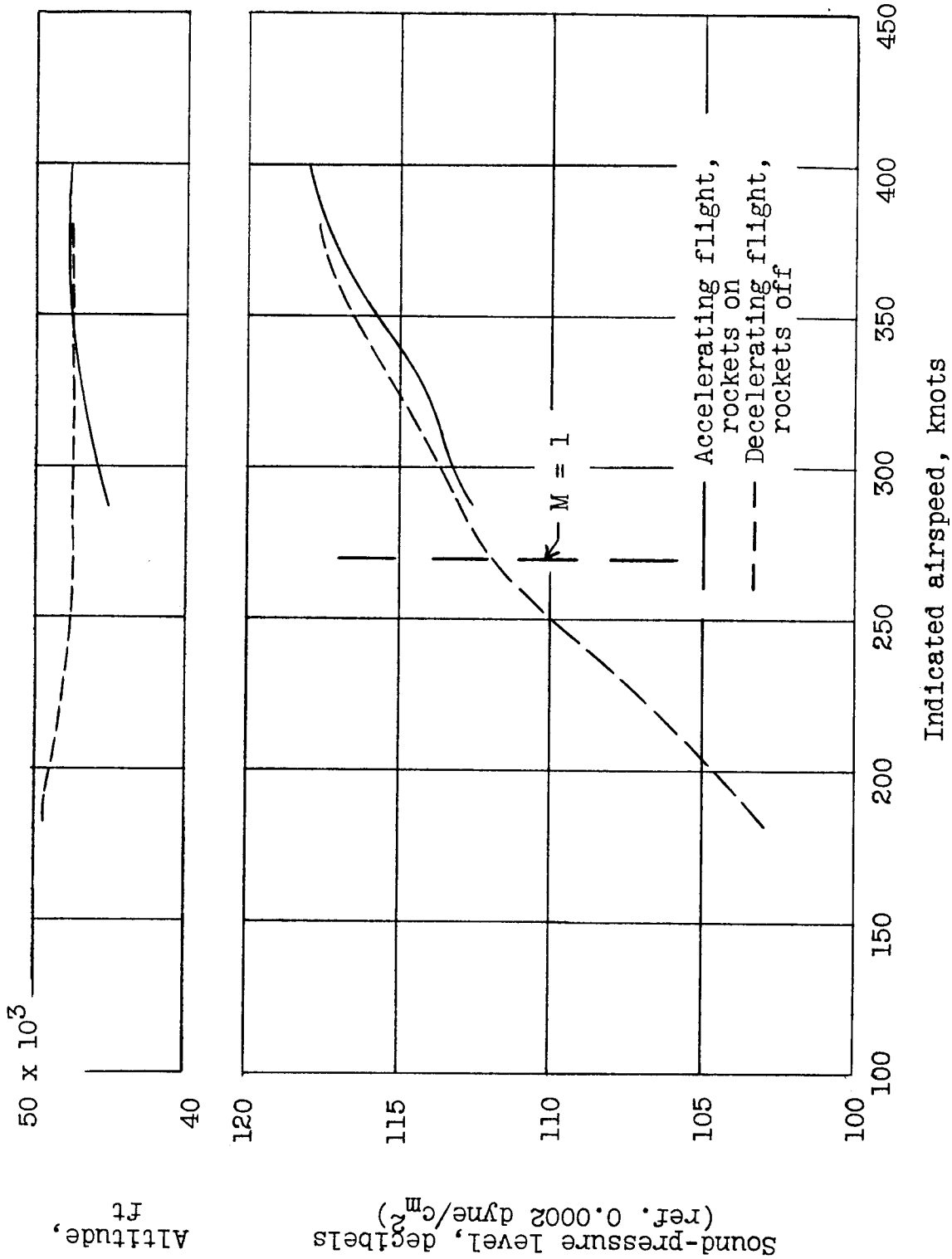

Figure 9.- Variation with indicated airspeed of overall sound-pressure level inside fuselage of D-558-II research airplane.