MAR 10 1954

[redacted]

Copy 1
RM L50G20

NACA RM L50G20

CLASSIFICATION CHANGED
TO Confidential
BY AUTHORITY OF Change Notice #518 Date

NACA

RESEARCH MEMORANDUM

ELEVATOR-STABILIZER EFFECTIVENESS AND TRIM OF THE X-1 AIRPLANE TO A MACH NUMBER OF 1.06

By Hubert M. Drake and John R. Carden

Langley Aeronautical Laboratory
Langley Air Force Base, Va.

CLASSIFICATION CHANGED
TO Unclassified
BY AUTHORITY OF 3121 Date 7/19/56

CLASSIFIED DOCUMENT

This document contains classified information affecting the National Defense of the United States within the meaning of the Espionage Act, USC 50:31 and 32. Its transmission or the revelation of its contents in any manner to an unauthorized person is prohibited by law.
Information so classified may be imparted only to persons in the military and naval services of the United States, appropriate civilian officers and employees of the Federal Government who have a legitimate interest therein, and to United States citizens of known loyalty and discretion who of necessity must be informed thereof.

NATIONAL ADVISORY COMMITTEE FOR AERONAUTICS

WASHINGTON

November 1, 1950

[redacted]

NATIONAL ADVISORY COMMITTEE FOR AERONAUTICS

RESEARCH MEMORANDUM

ELEVATOR-STABILIZER EFFECTIVENESS AND TRIM OF THE X-1 AIRPLANE TO A MACH NUMBER OF 1.06

By Hubert M. Drake and John R. Carden

SUMMARY

Limited measurements of elevator-stabilizer effectiveness and trim of the X-1 airplane with the 10-percent-thick wing and 8-percent-thick tail have been presented previously to a Mach number of about 0.93. Subsequent flights have permitted refinement and extension of these data to higher Mach numbers. The data presented in this report were obtained at about 40,000 feet altitude at Mach numbers between 0.78 and 1.06 for normal-force coefficients between 0.26 and 0.42.

The data show that at Mach numbers between 0.78 and 0.92, the variation of elevator position is gradual for all the stabilizer settings tested. Above a Mach number of about 0.92, trim changes are more pronounced. The magnitude and direction of these trim changes and the Mach number at which they occur change with stabilizer incidence. The data indicate that stabilizer angles of 2° and 0.5° are the limit settings for which the airplane can be trimmed with the elevator alone through the Mach number range up to $M = 1.0$. Because of the high altitude of flight the stick forces involved were moderate, maximum values of 30 pounds pull and 50 pounds push being obtained. The relative elevator-stabilizer effectiveness $di_t/d\delta_e$ decreases from a value of 0.25 at a Mach number of 0.78 to a minimum value of 0.05 at Mach number of 1.0. At Mach numbers between 1.01 and 1.06 the effectiveness increases. The variation of elevator deflection with stabilizer incidence was nonlinear between Mach numbers of 0.94 and 0.97. The variation of $di_t/d\delta_e$ with Mach number and the nonlinearity of this curve at Mach numbers between 0.94 and 0.97 were primarily responsible for the difference between the trim curves obtained at the various stabilizer settings. It was found that, with the elevator fixed at zero, only about 0.5° of stabilizer movement would be required to trim through the Mach number range from 0.78 to 1.02 but greater movements would be required at Mach numbers above 1.02.

INTRODUCTION

The variation of relative elevator-stabilizer effectiveness for the X-1 airplane having the 10-percent-thick wing and the 8-percent-thick tail has been presented in reference 1 for Mach numbers up to 0.93 as determined from limited measurements during the exploratory flights of the airplane. Subsequent flights, made primarily for the purposes of obtaining pressure distributions, have permitted refinement of these data and its extension to higher Mach numbers. These results are presented in this paper.

SYMBOLS

i_t stabilizer incidence angle, degrees

δ_e elevator angle at elevator center line, measured with respect to stabilizer, degrees

F_e elevator-wheel force, pounds

C_{N_A} airplane normal-force coefficient (nW/qS)

n normal acceleration, gravitational units

W airplane weight, pounds

S airplane wing area, square feet

q dynamic pressure, pounds per square foot

AIRPLANE AND INSTRUMENTATION

A three-view layout of the X-1 airplane utilized in the NACA transonic research program is shown as figure 1. A complete description of the airplane is presented in reference 2.

Instrumentation installed in the airplane includes standard NACA recording instruments which record indicated airspeed, altitude, three components of acceleration, pitching velocity, elevator and stabilizer position, and elevator control force. A modified SCR 584 radar unit is used to obtain the airspeed calibration on each flight as described in reference 3. All records are synchronized by a common timer.

The elevator angles presented herein were measured with respect to the stabilizer by a transmitter installed at the center line of the elevator torque tube on the fuselage center line. The stabilizer angles were measured with respect to the fuselage center line.

TESTS, RESULTS, AND DISCUSSION

The data presented in this report were obtained in level flight at altitudes between 38,000 and 42,000 feet and the elevator position was measured at the center of the elevator; therefore, tail or elevator distortion effects were not investigated and the results presented neglect these effects. Because of the variation in attitude, airplane weight, and speed during the runs, each set of data was obtained at a slightly different range of normal-force coefficients. The center-of-gravity location ranged from 20.9 to 21.8 percent of the mean aerodynamic chord and was neglected in the analysis.

The variations of elevator position and force with Mach number for several stabilizer settings are presented in figure 2. At Mach numbers between 0.78 and 0.92 the data for all stabilizer settings are generally similar, and the trim changes are gradual and small for all but the 2.1° stabilizer setting. Above a Mach number of 0.92 there are more abrupt changes in trim which are different in magnitude and direction for the various stabilizer settings. The most pronounced of these trim changes are in the nose-down direction at a Mach number of 0.92 for 2.1° incidence and in the nose-up direction at a Mach number of about 0.96 for 0.5° stabilizer and at about 0.99 for the other stabilizer settings.

The data indicate that 2° to 0.5° are about the limit stabilizer incidences for which the airplane can be trimmed by the elevator up to a Mach number of 1 at normal-force coefficients near 0.3. The elevator limits are 14° up and 11° down.

The friction in the elevator control is about ±4 pounds. Lines have therefore been faired through the elevator wheel-force data and only the faired lines have been presented in figure 2. These data show that the elevator forces follow the same trends as do the positions discussed previously. Because of the high altitude of these flights, the forces were moderate over the range of stabilizer incidences tested; the maximum elevator control forces encountered in flying to a Mach number of 0.95 were only about 12 pounds pull and 15 pounds push. At higher Mach numbers greater forces are required by the larger elevator angles involved in the trim changes discussed previously. The largest forces encountered were about 30 pounds pull and 50 pounds push.

The data of figure 2 were converted to a constant normal-force coefficient of 0.30 by changing the elevator angle by the increment which would be required to obtain 0.3 normal-force coefficient. The values of $d\delta_e/dC_{N_A}$ used to make this change were obtained from turns and pull-ups. An estimate of the effect of the curvature of the flight path on the elevator angle was made and it was found to be a maximum of about 0.3°. These data are replotted in figure 3 and show that, at a constant normal-force coefficient of 0.3, the variations in elevator position with Mach number would be more pronounced than was indicated by the data of figure 2 in which there were differences in normal-force coefficient between the various runs.

The data of figure 3 were cross-plotted to obtain the relative elevator-stabilizer effectiveness $di_t/d\delta_e$. Some examples of these cross plots are shown on figure 4. For Mach numbers below about 0.94 the variation of elevator position with stabilizer incidence was linear, but at Mach numbers between 0.93 and 1.0 the variation is not linear, lower effectiveness being indicated for down-elevator angles than for up angles. Above a Mach number of unity, insufficient data are available to determine the shape of the curve.

The variation of $di_t/d\delta_e$ with Mach number is shown on figure 5. These data indicate that the value of $di_t/d\delta_e$ decreases from a value of 0.25 at a Mach number of 0.78 to a value of about 0.05 at a Mach number of 1.0. At supersonic speeds an increase in effectiveness is indicated. The curve above a Mach number of 1.01 is less well defined than at lower speeds since only two trim curves were used in obtaining it. At Mach numbers between 0.94 and 0.975 curves are shown for the slopes measured at elevator angles of 4° up and down. The effectiveness is considerably lower for down-elevator angles than for up-elevator angles.

Examination of the curves of figure 3 in relation to the control effectiveness presented in figure 5 indicates that the differences in the magnitudes and directions of trim changes of the trim curves at different stabilizer settings may be accounted for by the large variation in $di_t/d\delta_e$ over the Mach number range and the fact that the effectiveness varies with elevator position, as shown in figure 4, at Mach numbers between 0.94 and 0.97.

The variation of stabilizer position with Mach number required for trim with zero elevator angle was obtained from the cross plots of elevator and stabilizer angles used to obtain figure 5 and are presented as figure 6. These data show that only about 0.5° movement of an all-moveable tail would be required to trim through the Mach number range from 0.78 to 1.02 at C_{N_A} of 0.3. At supersonic speeds an increase in the stabilizer angle required is indicated. In this case, again, the

curve was obtained from only two trim curves above a Mach number of 1.015 and is therefore less well defined than at lower Mach numbers.

As pointed out previously, the effects of tail or elevator distortion are included in the variation of effectiveness shown. Some data have been obtained on the X-1 having the 8-percent-thick wing and 6-percent-thick tail which indicate that twisting of the horizontal tail and elevator surface may occur and that the amount of twist is affected by the dynamic pressure, Mach number, and elevator position. It is believed, however, that the effect of elevator twist is secondary to the aerodynamic losses in elevator effectiveness in causing the variations in the trim curves for the different stabilizer settings. Flight measurements of tail twist will be necessary before the effects of such distortion on the control effectivness and the reasons for the trim changes experienced can be determined.

CONCLUSIONS

From the trim data obtained for the X-1 airplane at about 40,000 feet altitude and a normal-force-coefficient range from 0.26 to 0.42 it has been found that:

1. At Mach numbers between 0.78 and 0.92 the variation of elevator position with Mach number is gradual for all the stabilizer settings tested. Above a Mach number of about 0.92 the trim changes are more abrupt. The magnitude and direction of these trim changes and the Mach number at which they occur vary with stabilizer setting.

2. The data indicate that stabilizer angles of 0.5° and 2° are the limit settings for which the airplane can be trimmed for Mach numbers up to 1.0 with the elevator alone.

3. Because of the high altitude of these flights, the stick forces were moderate at Mach numbers below 0.95 but reached values of 30 pounds pull and 50 pounds push at higher Mach numbers.

4. The relative elevator-stabilizer effectiveness decreases from about 0.25 at Mach number 0.78 to a minimum of 0.05 at Mach number 1.0. The effectiveness then increases as Mach number is increased to $M = 1.06$. At Mach numbers between 0.94 and 0.97 the effectiveness is affected by elevator angle. The variation in elevator-stabilizer effectiveness and its nonlinearity at Mach number between 0.94 and 0.97 are primarily responsible for the difference between the trim curves obtained at the various stabilizer settings.

5. With the elevator fixed at zero, about 0.5° of stabilizer movement would be required to trim to a Mach number of 1.02, but greater movements would be required above 1.02.

Langley Aeronautical Laboratory
National Advisory Committee for Aeronautics
Langley Air Force Base, Va.

REFERENCES

1. Drake, Hubert M., Goodman, Harold R., and Hoover, Herbert H.: Preliminary Results of NACA Transonic Flights of the XS-1 Airplane with 10-Percent-Thick Wing and 8-Percent-Thick Horizontal Tail. NACA RM L8I29, 1948.

2. Williams, Walter C., Forsyth, Charles M., and Brown, Beverly P.: General Handling Qualities Results Obtained During Acceptance Flight Tests of the Bell X-1 Airplane. NACA RM L8A09, 1948.

3. Goodman, Harold R., and Yancey, Roxannah B.: The Static-Pressure Error of Wing and Fuselage Airspeed Installations of the X-1 Airplanes in Transonic Flight. NACA RM L9G22, 1949.

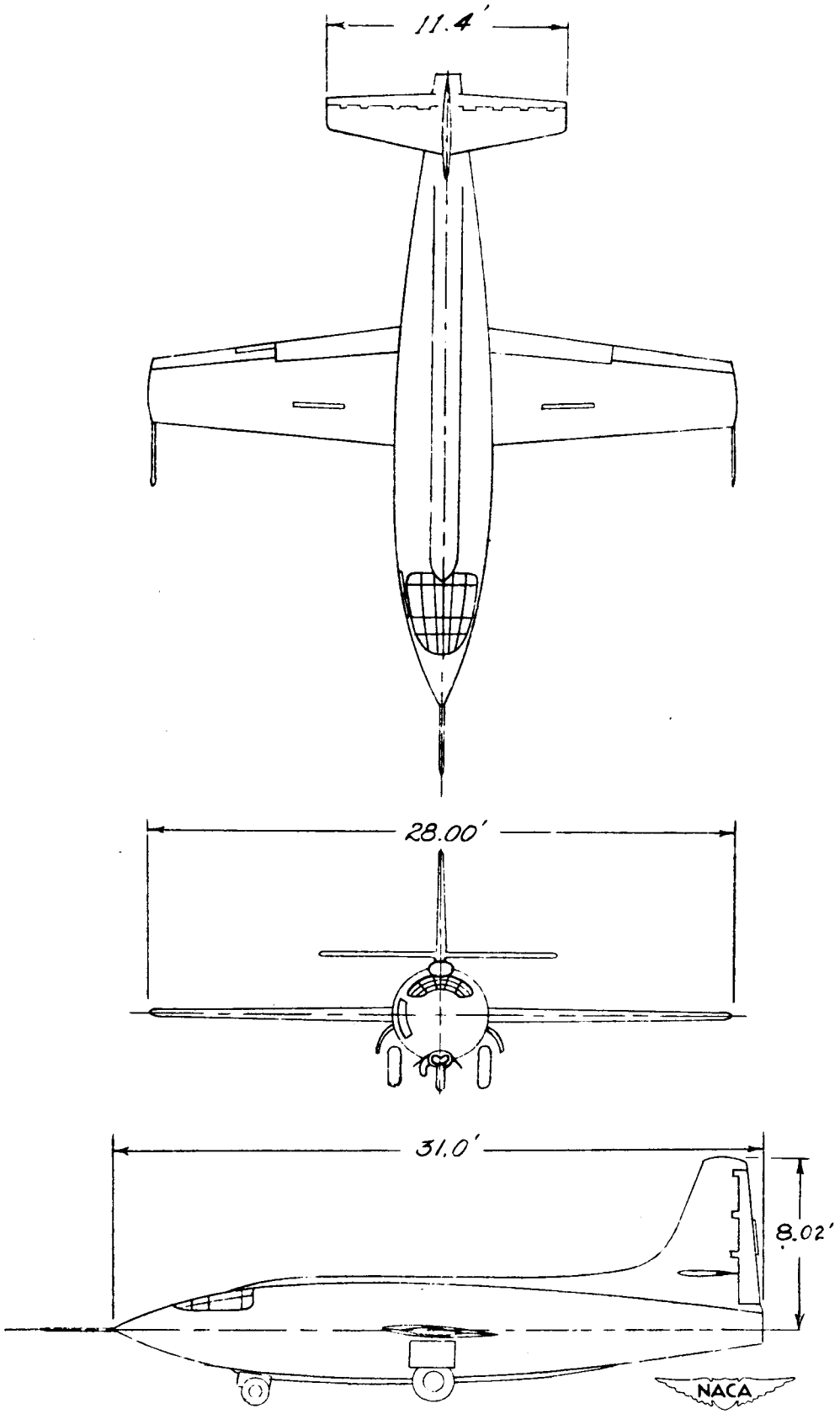

Figure 1.- Three-view sketch of X-1 research airplane.

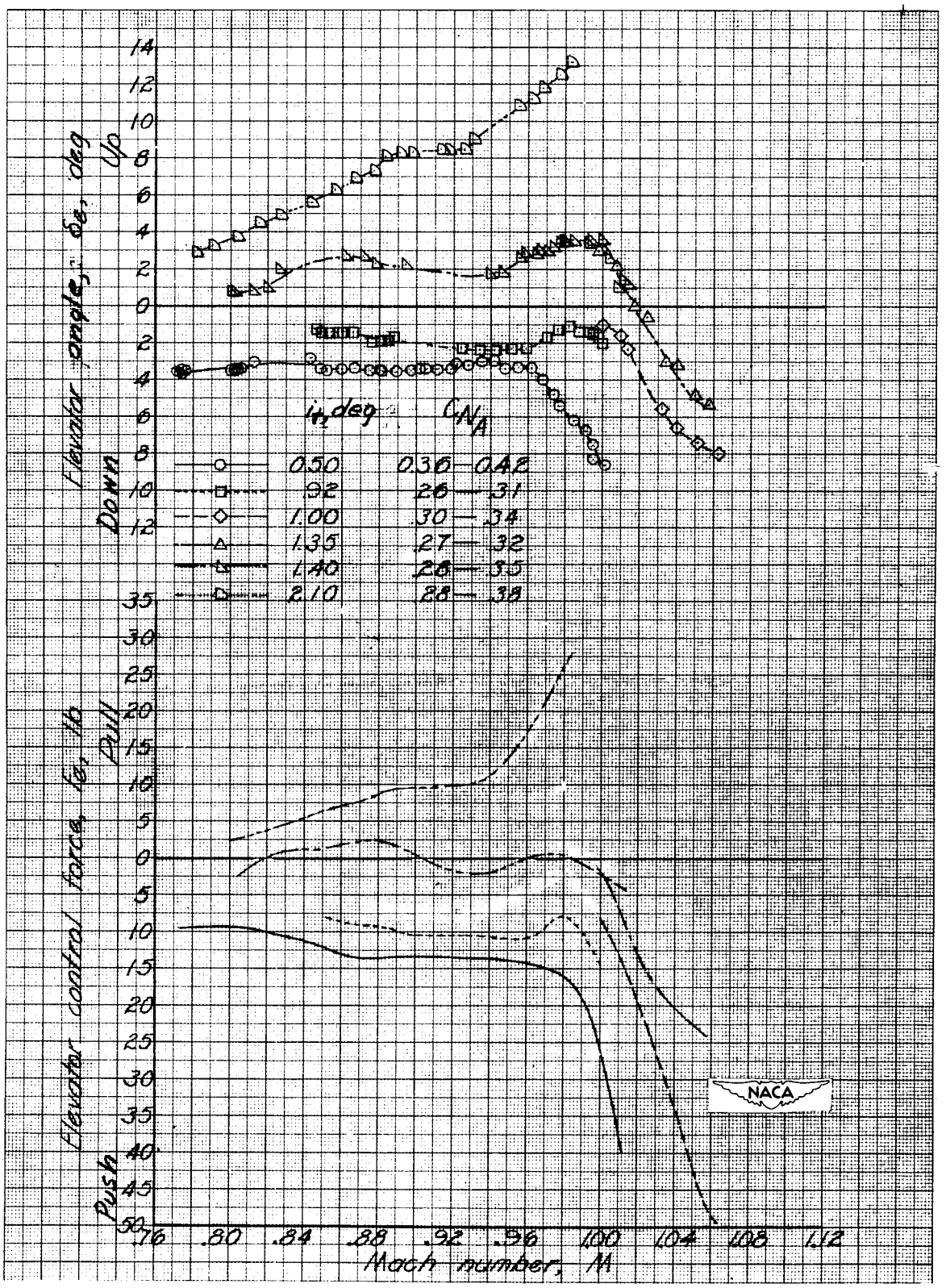

Figure 2.- Variation of elevator angle and control force with Mach number at various stabilizer settings. X-1 airplane; pressure altitude, about 40,000 feet.

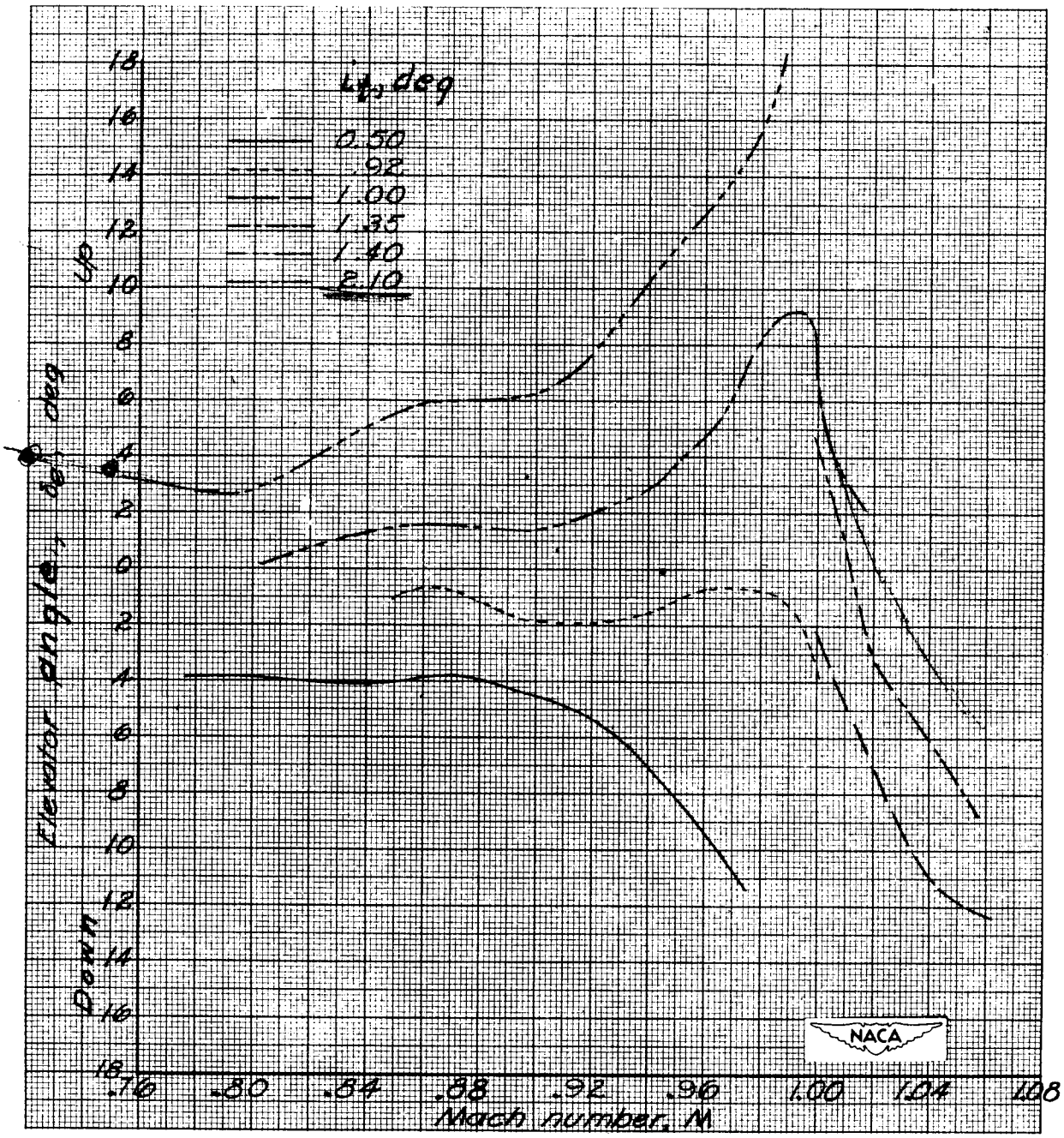

Figure 3.- Variation of elevator angle with Mach number for various stabilizer settings at a normal-force coefficient of 0.3.

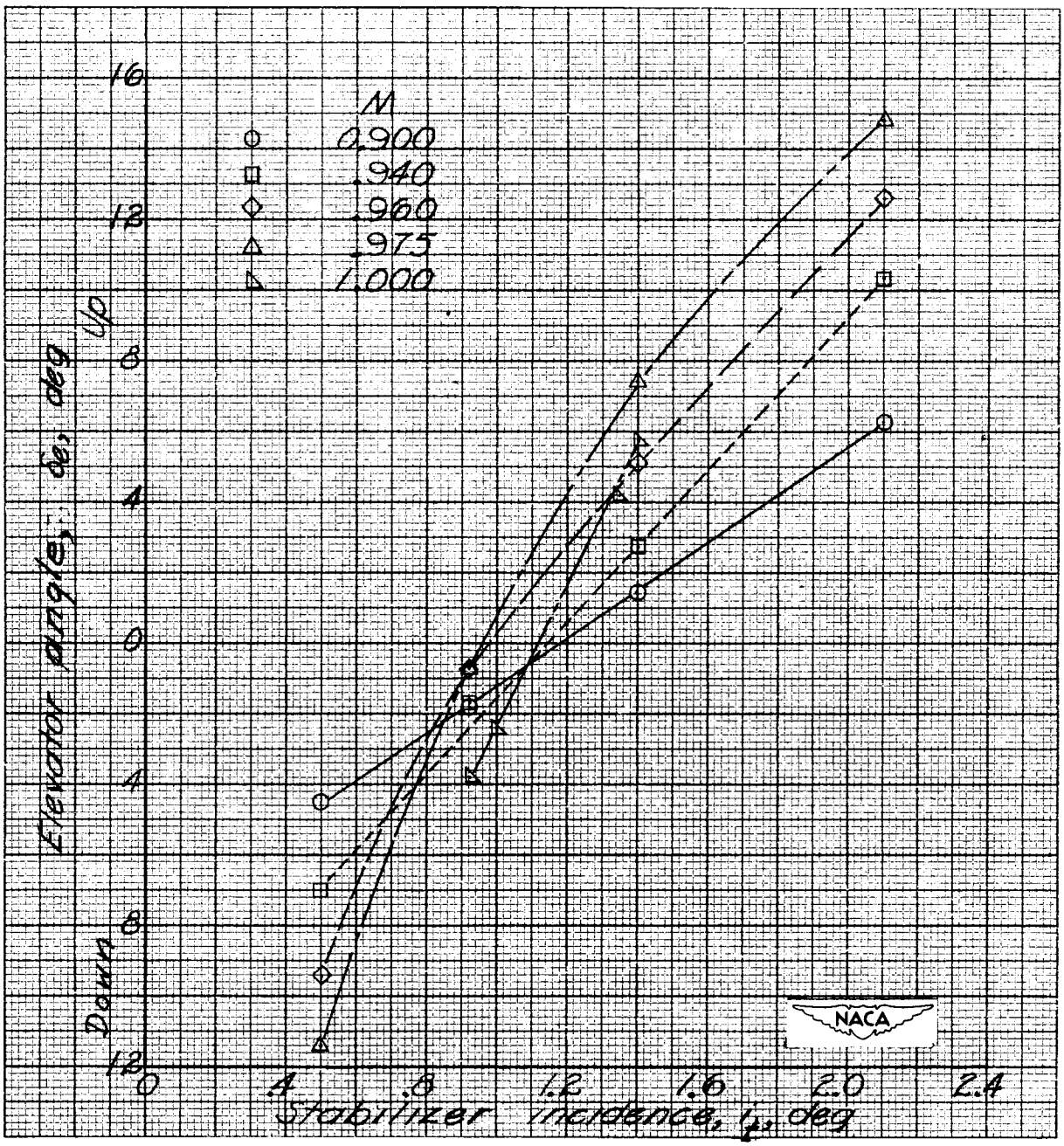

Figure 4.- Effect of Mach number on variation of elevator angle with stabilizer incidence at a normal-force coefficient of 0.3.

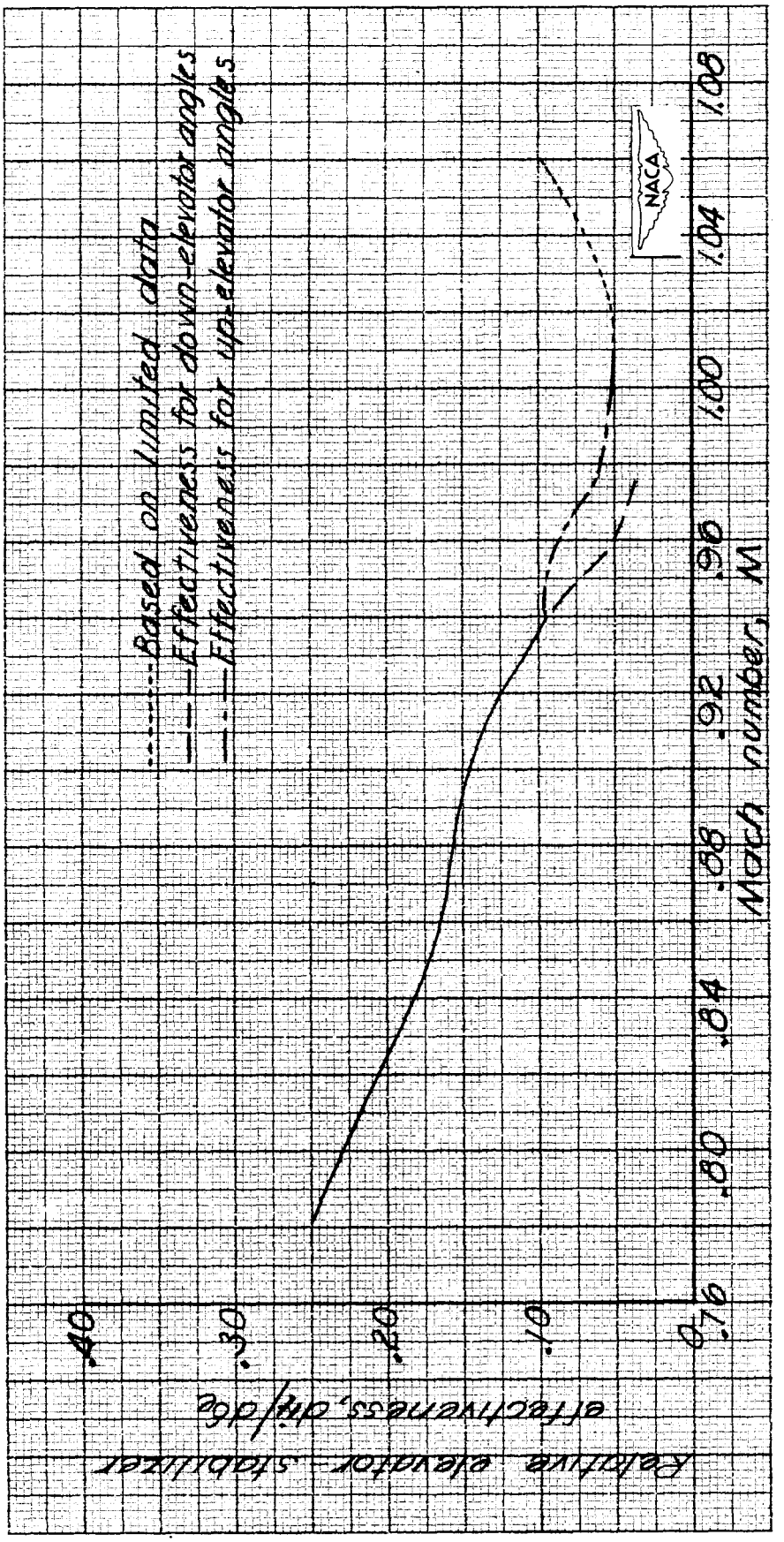

Figure 5.- Variation of relative elevator-stabilizer effectiveness with Mach number for the X-1 airplane at a normal-force coefficient of 0.3 and an altitude of about 40,000 feet.

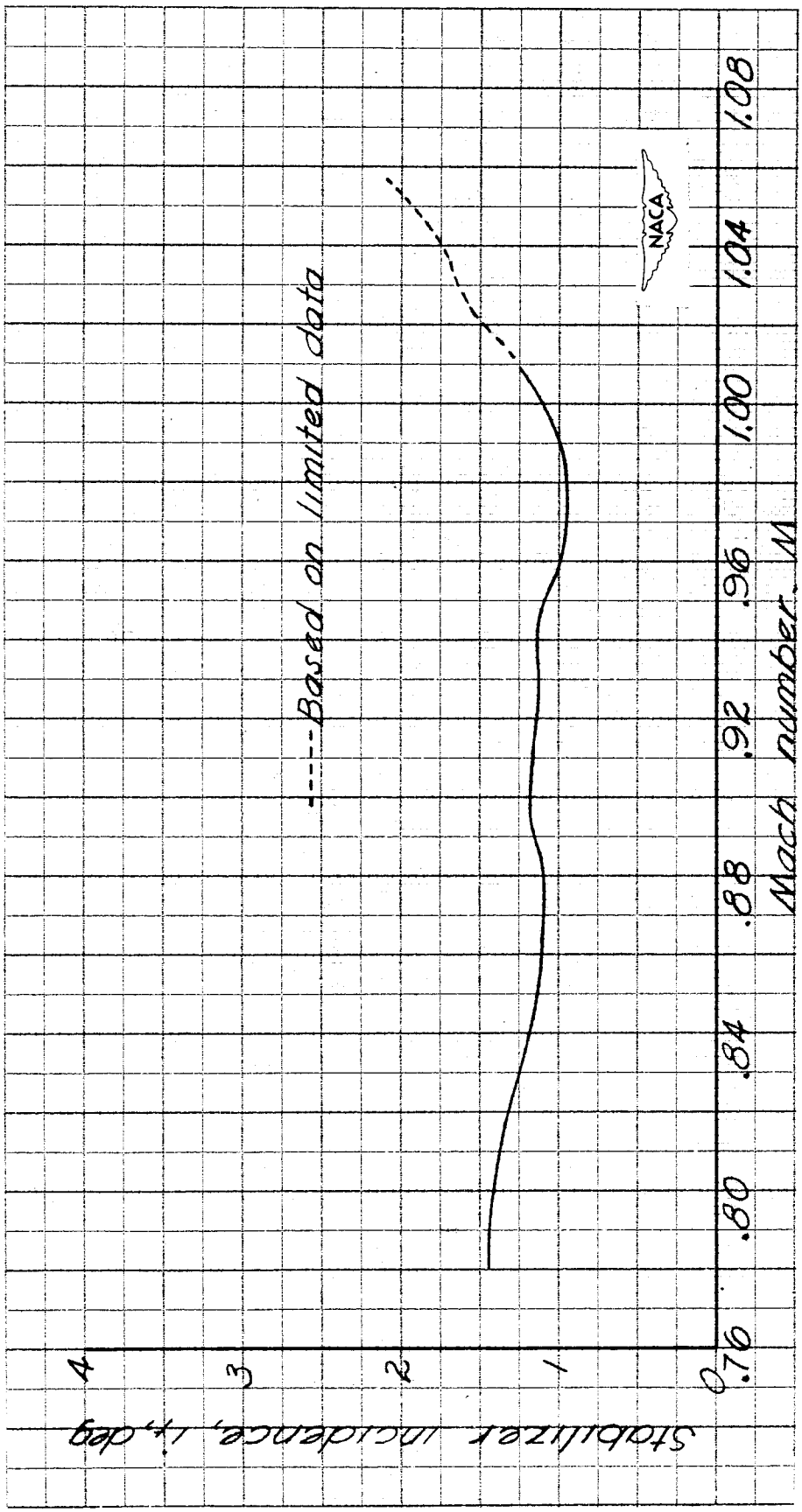

Figure 6.- Variation of stabilizer incidence required for trim with Mach number. Elevator angle, 0°; normal-force coefficient, 0.3; pressure altitude, 40,000 feet.

NACA-Langley - 11-1-50 -148